ADDENDUM NO. 1
February 26, 2021
224126

RE: **CITY OF BARRE, VERMONT**
BIOSOLIDS IMPROVEMENTS PROJECT

FROM: DuBOIS & KING, INC.
P.O. Box 339
Randolph, Vermont 05060
(802) 728-3376

TO: **Prospective Bidders**

This Addendum forms part of the Contract Documents and modifies the original Bidding Documents issued by the City of Barre, for the Barre Biosolids Improvements project dated February 3, 2021. **Acknowledge receipt of this Addendum in the space provided on Page 1 of the Bid Form. Failure to do so will subject the Bidder to disqualification.**

I. Pre-Bid Meeting

A MANDATORY Pre-Bid meeting was held at the Barre Wastewater Treatment Facility on February 18, 2021 at 10:00 a.m. Attendees are listed on the attached Pre-Bid Meeting Attendance Log (**Attachment 1**). Bids will be opened only from bidders whose firm name appears on this attendance log. Chuck Goodling, P.E., of DuBois & King, Inc. described key elements of the project. The following addresses questions received and additional information.

II. Questions & Answers

Question 1: What is the Engineer's Opinion of Probable Cost?

Answer 1: $675,000 to $755,000.

Question 2: Are there any DBE requirements with this project?

Answer 2: No.

Question 3: Is digester cleaning included in this project?

Answer 3: Yes. It is noted that the following firm has expressed interest in this portion of the project:

Denali Water Solutions
Anita Dean, Vice President Sales & Development
10 Stuart Road
Peabody, MA 01960
Cell: 978-979-5916
anita.dean@denaliwater.com

Question 4: Is there biosolids removal associated with this project?

Answer 4: Yes. It is anticipated that biosolids, grit and other materials that have accumulated inside Digester No. 2 will need to be removed to facilitate internal cleaning and internal replacements. Contractor shall include in his bid all costs associated with removing and disposing at a landfill residual grit and thicker sludge of a quantity of approximately 500-gallons. Refer to revised 02225 1.06 D 1 c below.

Question 5: Is there a specification for the sludge piping?

Answer 5: Sludge piping shall match existing, which is Ductile Iron, Class 52, cement lined with bituminous seal coat, flanged. Where inside the digester building, paint new sludge piping to match existing.

Question 6: What is the size of the piping at the transmitter shown on **Sheet C7**?

Answer 6: 3 inches.

Question 7: In reference to **Sheet C5 note 4**: is it possible to carry an allowance for removing and disposing of the solids from the existing tank?

Answer 7: No, see response to Question 4.

Question 8: Will it be possible to isolate the sludge and the gas piping from digesters 1 and 3 during the connection of the new piping?

Answer 8: Yes. Existing valves are present to provide this isolation.

Question 9: Are there any coatings required on the interior of the concrete digester tank?

Answer 9: The project as currently designed does not require coatings on the inside of the concrete digester tank. Once the digester walls have been cleaned, contractor shall provide time for the Engineer and Owner to visually inspect the condition of the walls. If it is determined that repairs and/or coating of the interior digester walls should be completed, this would be added to the project via change order.

Question 10: In which of the two bid items would the piping and electrical work belong?

Answer 10: The following piping and electrical work shall be included in Pay Item No. 1:

- All piping in and out of Digester No. 2, back to first flange inside Digester Building. Wall penetrations may require modification to facilitate this work. Double link seal, if present, shall be replaced.
- New pressure transmitter and related work shown on Sheet C7.
- Electrical conduit on the cover that provides electrical service to the mixer.

All other piping and electrical work shall be included in Pay Item No. 2. Refer to Section 01150 3.02 A for further descriptions of Measurement and Payment.

Question 11: Would the Contractor be allowed to assemble the new digester cover in the area next to the existing Storage Building (former Headworks Building)?

Answer 11: Yes, as long as this work does not interfere with the flow of traffic into and out of the treatment facility. Additionally, a staging area is identified on Sheet C2. Contractor is responsible for properly restoring all disturbed areas.

Question 12: In reference to **Sheet C8**, will support piers be required to support the 10" channel?

Answer 12: The channel was sized/designed to span the identified length. The channel is attached to the concrete pier on one end. The reissued Sheets C8 and C9 identify a support on the concrete pad associated with the Gas Burner Control Panel.

Question 13: Can you provide the quantities and sizes for the Gas Handling and Safety Equipment as listed in **Technical Specification Section 11350**.

Answer 13: See **Attachment 2**.

Question 14: In reference to **Special Conditions page 1 of 1,** the equipment lead may be longer than the 4 + 24 weeks indicated. The active construction period would start before the equipment arrives but would be about 16 weeks in duration.

Answer 14: See response to Question 15.

Question 15: Is dewatering included in the 10-week active construction schedule?

Answer 15: The City is open to permitting some construction activities to occur at the site outside of the 10-week active construction period that is identified in the Special Conditions, with proper advanced notice and coordination with treatment facility staff. These activities include the following:

- Mobilization/demobilization.
- Installation of erosion control measures.
- Dewatering Digester No. 2.
- Site restoration.

Question 16: Can you provide a quantity on dewatering?

Answer 16: See response to Question 4.

Question 17: When was the last time the tank was cleaned?

Answer 17: When the cover was installed in the mid-1990's.

Question 18: Is it the Contractors responsibility to dispose of the sludge?

Answer 18: Yes.

Question 19: Does the main access road have to be clear at all times?

Answer 19: Yes, the flow of vehicular traffic into and out of the site cannot be interrupted. The contractor can place a crane on the side access road, between the digesters and the abandoned aeration basins (west side of Digester No. 2).

Question 20: Where is the bid opening? Will it be held in person or will it be via phone call/ zoom call?

Answer 20: The bid opening will be held at 6 North Main Street, Suite 1, Barre, VT 05641, on

March 5, 2021. Bids will be received until 11:00 am and then opened. The bid opening will follow CDC protocol and bids will be publicly read aloud. All attendees must sign in, wear a mask, and will have their temperature taken.

Question 21: Is it the Contractor's responsibility to integrate the SCADA system?

Answer 21: Yes, the Contractor is responsible for SCADA integration and associated coordination and costs. The Contractor is required to utilize LCS Controls Inc. for integration. The Contractor should contact:
LCS Controls Inc.
Rochester, VT 05767

Question 22: **Specification 11500 2.2.A.3** states a 30" manhole will be provided but a 36" manhole is shown on drawing C7, which is to be supplied?

Answer 22: 36" manhole.

Question 23: **Specification 11500 2.2.A.5** states 8" diameter sample tubes are to be provided, but 6" sample tubes are shown on drawing C7, which is to be supplied?

Answer 23: 8" diameter sample tubes.

Question 24: Is it acceptable to submit the bid via email?

Answer 24: No. See response to Question 20.

Question 25: Can the bid date be extended?

Answer 25: No. See response to Question 20.

Question 26: Will the existing LP tank be relocated by the gas supplier or the contractor?

Answer 26: The contractor.

Question 27: What volume of waste should be assumed for disposal?

Answer 27: See response to Question 4.

III. Changes to Plans

1. Reissue sheet C4. See **Attachment 3**.

2. On Sheet C5 add note stating "CUT AND CAP 2" PVC PILOT LINE AND 4" D.I. WASTE GAS LINE AT WALL PENETRATION" to "SLUDGE/GAS PIPING PLAN ABOVE ELEV. 571.00".

3. Reissue sheet C6. See **Attachment 3**.

4. On Sheet C7 in the table titled "FIXED COVER DESIGN PARAMETERS", the Pressure, Max., should be 18" WC (not 16" WC as shown), and Vacuum should be 2" WC (not 0.865" WC as shown).

5. Reissue sheet C8. See **Attachment 3**.

6. Reissue sheet C9. See **Attachment 3**.

IV. Changes to Specifications

1. **REMOVE** Specification Section 01150 and **REPLACE** with the attached Section 01150. See **Attachment 4**.

2. The following changes to Specification Section 02225 Demolition and Modifications are noted:

    a. **REMOVE** paragraph 1.06 D 1 c and **REPLACE** it with the following:

        c. Contractor shall include in his bid all costs associated with removing and disposing at a landfill residual grit and thicker sludge remaining in the bottom of the digester. The Owner has estimated that approximately 500-gallons require removal and disposal.

3. The following changes to Specification Section 02605 Buried Pipe and Fittings are noted:

    a. **DELETE** 1.02 G.

    b. **ADD** the following at the end of paragraph 2.01 A:

    All buried stainless steel piping shall be welded and all interior stainless steel piping shall be flanged.

4. The following changes to Specification Section 11350 Digester Gas Handling and Safety Equipment are noted:

a. **ADD** the following to paragraph 1.03 C, Manufacturer's/Supplier's Certificate of Compliance:

1. Manufacturer's Suppliers Certificate of Compliance shall include a copy of this specification section, with addendum updates and all referenced and applicable sections:
   a. Provide each paragraph, check-marked to indicate specification compliance or marked to indicate requested deviations from specification requirements or those parts which are to be provided by the Contractor or others.
   b. Check-marks shall denote full compliance with a paragraph as a whole. If deviations from the specifications are indicated, and therefore requested by the Contractor, each deviation shall be underlined and denoted by a number in the margin to the right of the identified paragraph, referenced to a detailed written explanation of the reasons for requesting the deviation.
   c. The Engineer shall be the final authority for determining the acceptability of requested deviations.
   d. The remaining portions of the paragraph not underlined shall signify compliance on the part of the Contractor with the specifications. Failure to include a copy of the marked-up specification sections, along with justification(s) for any requested deviations to the specification requirements shall be cause for rejection of the entire submittal and no further submittal material will be reviewed.

b. **REMOVE** paragraph 1.06 A and **REPLACE** it with the following:

A. Acceptable manufacturers of the digester gas handling and safety equipment are Varec Biogas, an Ovivo Company, Groth Corporation, or approved equal. The drawing layout and standards of service are based on Varec Biogas equipment.

B. The Owner and Engineer believe the identified manufacturers are capable of producing equipment and/or products that will satisfy the requirements of this Section. This statement, however, shall not be construed as an endorsement of a particular manufacturer's products, nor shall it be construed that the named manufacturer's standard equipment or products will comply with the requirements of this Section.

b. **REMOVE** paragraph 2.02 H 9 and **REPLACE** it with the following:

9. Dry contacts or inputs for remote indication of Pilot On/Off and Pilot Flame Failure functions. Flare panel must have PLC with Ethernet connections and the capability to communicate with plant SCADA using either MODBUS TCP or Ethernet/IP protocols.

5. The following changes to Specification Section 11500 Fixed Digester Cover are noted:

a. **REMOVE** paragraph 1.06 B and **REPLACE** it with the following:

B. Acceptable manufacturers of the digester cover are Ovivo USA, LLC, Walker Process Equipment, WesTech, Envirodyne Systems, Inc., or approved equal. The drawing layout and standards of service are based on Ovivo USA, LLC, equipment.

C. The Owner and Engineer believe the identified manufacturers are capable of producing equipment and/or products that will satisfy the requirements of this Section. This statement, however, shall not be construed as an endorsement of a particular manufacturer's products, nor shall it be construed that the named manufacturer's standard equipment or products will comply with the requirements of this Section.

b. In Section 2.01 C, the loading table shall be modified as follows:

CHANGE the PRVB Setting from 16" WC to 14" WC. At the bottom of the table, **ADD** the following: "Emergency Relief Manhole Cover Setting, 16" WC".

c. **DELETE** the follow from Section 2.01 C: "…to allow the cover to be self-supporting when resting in an empty tank on the corbels or on the tank wall…."

d. In Section 2.03 A 3, **REPLACE** the 30-inch diameter emergency relief manhole with a 36-inch diameter emergency relief manhole.

V. Alternate Bid

1. An Alternate Bid is hereby **ADDED** to this project. The purpose of the Alternate Bid is to identify the cost associated with supplying and installing a Mild Steel Cover. To serve as a basis for the Alternate Bid, Specification Section 11500 Fixed Digester Cover is modified as follows:

a. **REMOVE** the word "stainless" from 1.01 A and **REPLACE** with "mild".

b. **REMOVE** the word "stainless" from 1.07 B 1 and **REPLACE** with "mild".

c. **REMOVE** the word "stainless" from 2.01 B and REPLACE with "mild".

d. **REMOVE** the words "304L stainless" from 2.01 and **REPLACE** with "mild".

e. **REPLACE** 3.04 FINISHES with the following:

1. Steel plates, structural shapes and fabricated assemblies shall be shipped unpainted for field painting by others. After erection, welding, testing and final inspection of erection by manufacturer's representative, the cover shall be painted as required by the manufacturer, and as outlined below.

2. All steel components and surfaces shall be sand blasted to a SSPC-SP5/NACE 1 White Metal Blast Cleaning with a 3.0 mil minimum angular anchor profile.

3. All steel components and surfaces shall receive a primer coat of TNEMEC N69 Epoxy Primer. The first coat shall be sprayed then backrolled to ensure complete, non-porous coverage. Minimum primer coat thickness shall be 6 to 10 mils DFT. Primer thickness shall be verified by the Engineer prior to the application of subsequent coats.

4. All painted surfaces shall receive two more coats of TNEMEC Series 435 PermaGlaze Modified Polyamine Epoxy. Each coat is to have a minimum thickness of 20 mils DFT.

5. Total applied paint thickness at completion shall be 46 to 50 mils DFT. Additional application of coatings will be required to bring the final paint thickness to this minimum.

6. Coatings shall be applied in strict accordance with the coating manufacturer's recommendations.

2. **REPLACE** the bid form with the attached bid form, which has been reissued to include the Alternate Bid. Only the attached Bid Form with the footer that says **"ADDENDUM NO. 1 2-26-2021 BID FORM"** will be accepted. Bids that utilize any other bid form will be determined non-responsive. See **Attachment 5.**

3. It is noted in the replacement Specification Section 01150 that bids will be evaluated based on the Base Bid. If all Base Bids are rejected by the Owner, the bids will be evaluated based on the Alternate Bid.

This document constitutes Addendum 1 for this project.

ATTACHMENT 1

MANDATORY
PRE-BID MEETING

BIOSOLIDS IMPROVEMENTS PROJECT
BARRE, VERMONT
224216

February 18, 2021

10:00 AM

ATTENDANCE LOG

(Please Print)

NAME	AFFILIATION & TITLE	PHONE #	E-MAIL ADDRESS
STEVE MICHELI	CITY OF BARRE	802-476-0250	SMICHELI@BARRECITY.ORG
ELIJAH MORGAN	CITY OF BARRE	802-476-0250	ENGTECH@BARRECITY.ORG
CARLIN BERGEN	PENTA CORPORATION	603-476-5525	PENTACORP@PENTACORP.US
BARRY SLEATH	NEIL H DANIEL INC DANIELS CONSTRUCTION	802-291-3921	BSLEATH@NEILHDANIELS.COM
EDDIE ADAMS	N A MANOSH	802-888-5722	NICKM@MANOSH.COM
DOUG BUCKLEY	A. COOPER MECH	802-655-9191	DBUCKLEY@COOPERVT.COM
JEREMIAH MCCAFFREY	BRICKLINERS MASONRY	802-363-1170	JMCCAFFREY@BRICKLINERS.COM
CHRIS MINADEO	NEAGLEY & CHASE CONSTRUCTION	802-316-0919	CMINADEO@NEAGLEYCHASE.COM
DYLAN MAGOON	NEAGLEY & CHASE CONSTRUCTION	802-782-9011	DMAGOON@NEAGLEYCHASE.COM

NAME	AFFILIATION & TITLE	PHONE #	E-MAIL ADDRESS
CLEMENTE VARAS	RINGSBURY COMPANIES, LLC	802-224-6176	ESTIMATING@KINGSBURYCO.COM
TOM FONTAINE	NAYLOR + BREEN	802-318-7392	TFONTAINE@NAYLORBREEN.COM
ROB TRZPACZ	TECHNOLOGY SALES ASSOC	603-848-3950	ROBT@TECHSALESNE.COM
TODD GOKEY	MEI ELECTRICAL CON.	802-988-9878	TODD.GOKEY@MEI-VT.COM
BILL AHEARN	CITY OF BARRE	802-476-7413	PWDIRECTOR@BARRECITY.ORG
CHUCK GOODLING	DUBOIS & KING INC.	802-728-3376 X1480	CGOODLING@DUBOIS-KING.COM
GALEN HAGEN	DUBOIS & KING INC.	802-878-7661 X7213	GHAGEN@DUBOIS-KING.COM

ATTACHMENT 2

Category	Item	Size	Quantity
Digester Utilization Gas Equipment	Low Pressure Drip Traps	6-QT	1
	Well Type Manometers	20" WC	1
	Flame Trap Assembly	4"	1
	Single Port Regulator (waste gas burner)	4"	1
	Flame Check or Flame Arrester for Vent Lines	1/2" NPT	1
Waste Gas Burner	Waste Gas Burner	4"	1
Digester Cover Accessories	Pressure/Vacuum Relief Valve and Flame Arrester	4"	2
	Safety Selector Valve	4"	1
	Emergency Relief Manhole Cover	36"	1
	Sampling and gauge hatch	8"	2
	Roof Manhole Cover	42"	1

ATTACHMENT 3

TRENCH ELECTRICAL

NOT TO SCALE

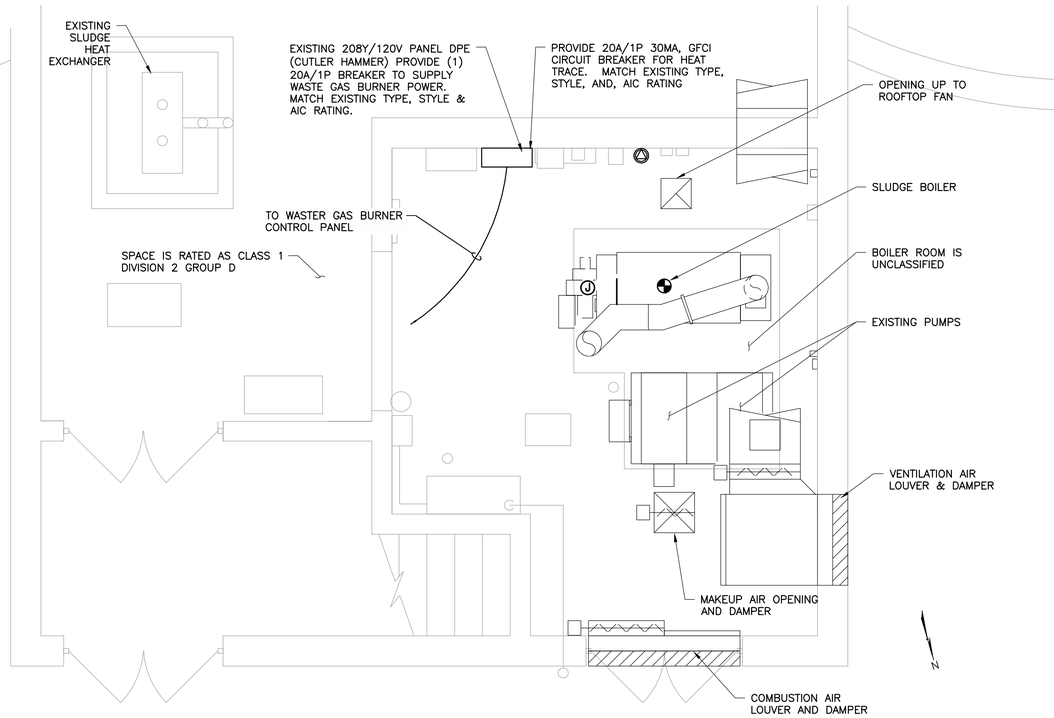

DIGESTER BUILDING ELECTRICAL NEW WORK PART PLAN

NOT TO SCALE

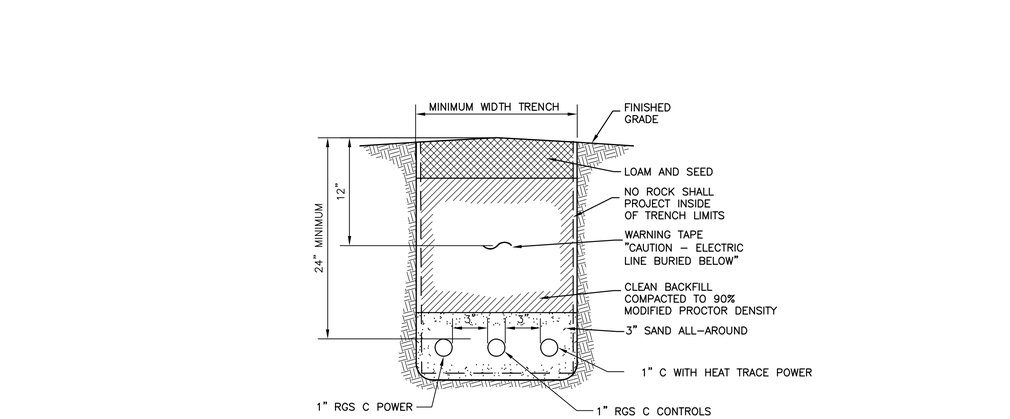

HEAT TRACE WIRING DIAGRAM

NOT TO SCALE

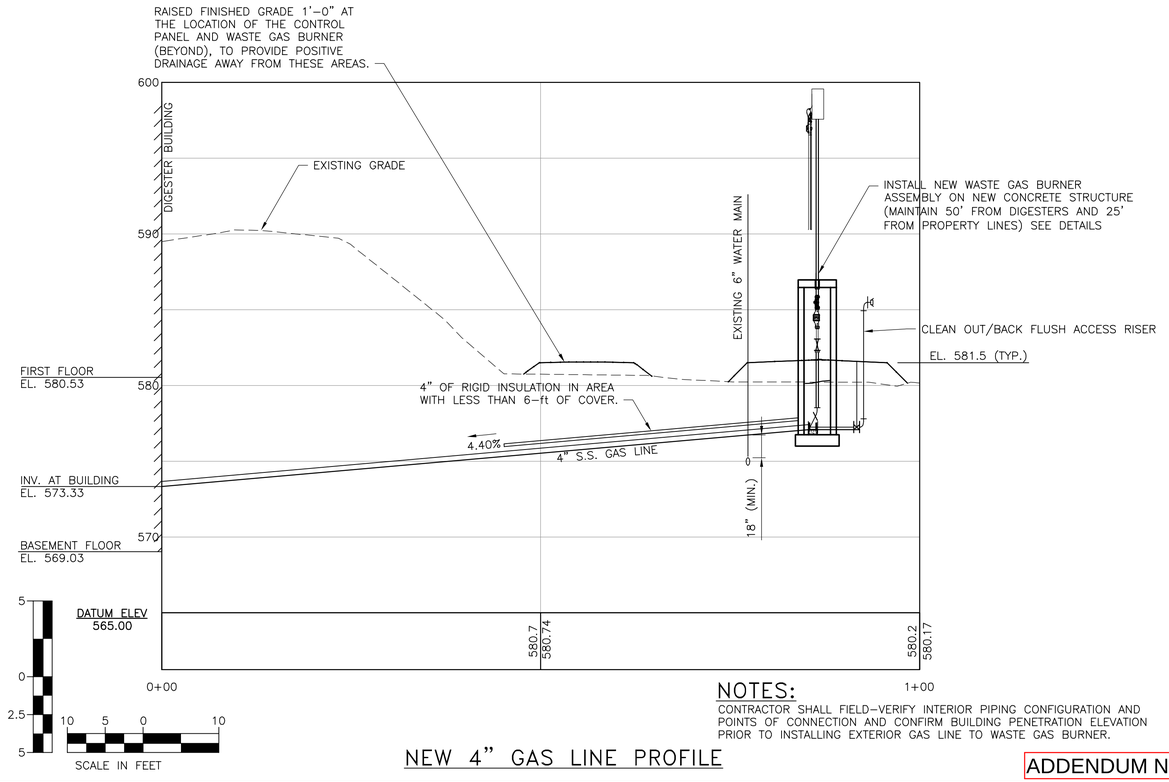

NEW 4" GAS LINE PROFILE

NOTES:

CONTRACTOR SHALL FIELD-VERIFY INTERIOR PIPING CONFIGURATION AND POINTS OF CONNECTION AND CONFIRM BUILDING PENETRATION ELEVATION PRIOR TO INSTALLING EXTERIOR GAS LINE TO WASTE GAS BURNER.

ADDENDUM NO. 1

DuBois & King inc.
ENGINEERING • PLANNING • MANAGEMENT • DEVELOPMENT
28 NORTH MAIN ST.
RANDOLPH, VT 05060
TEL: (802) 728-3376
FAX: (802) 783-7101
www.dubois-king.com
SO. BURLINGTON, VT
SPRINGFIELD, VT
BEDFORD, NH
LACONIA, NH

© Copyright 2020 DuBois & King Inc.

PROFESSIONAL SEAL

BIDDING DOCUMENTS NOT FOR CONSTRUCTION

NO.	DATE	DESCRIPTION	BY	CK'D

CITY OF BARRE,
6 N MAIN ST
BARRE, VT 05641

WILLIAM E. AHEARN, P.E.

DIRECTOR OF PUBLIC WORKS AND ENGINEERING

CITY OF BARRE WASTEWATER TREATMENT FACILITY

BIOSOLIDS IMPROVEMENT PROJECT

SHEET TITLE

NEW PROFILE

DRAWN BY	DATE
EBS	DEC. 2020
CHECKED BY	D&K PROJECT #
CKG	220127 P2
PROJ. ENG.	D&K ARCHIVE #
GPH	13681

SHEET NUMBER

C4

SHEET 4 OF 9

I:\21220127P2 Barre Digester No 2 Study Phase\dwg\220127P2-NU01.DWG 2/25/2021 10:26 AM

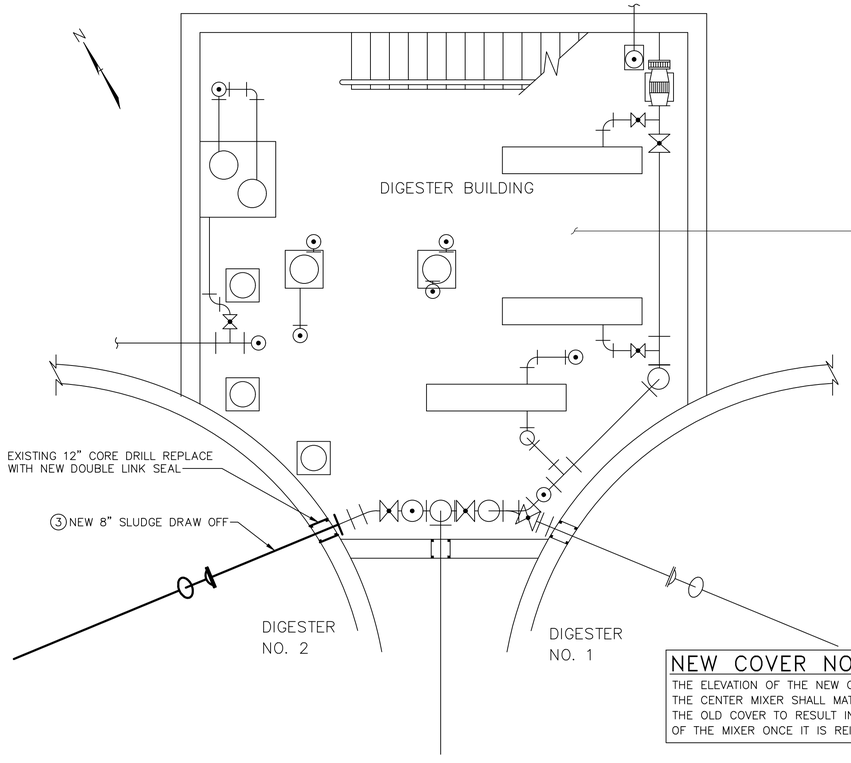

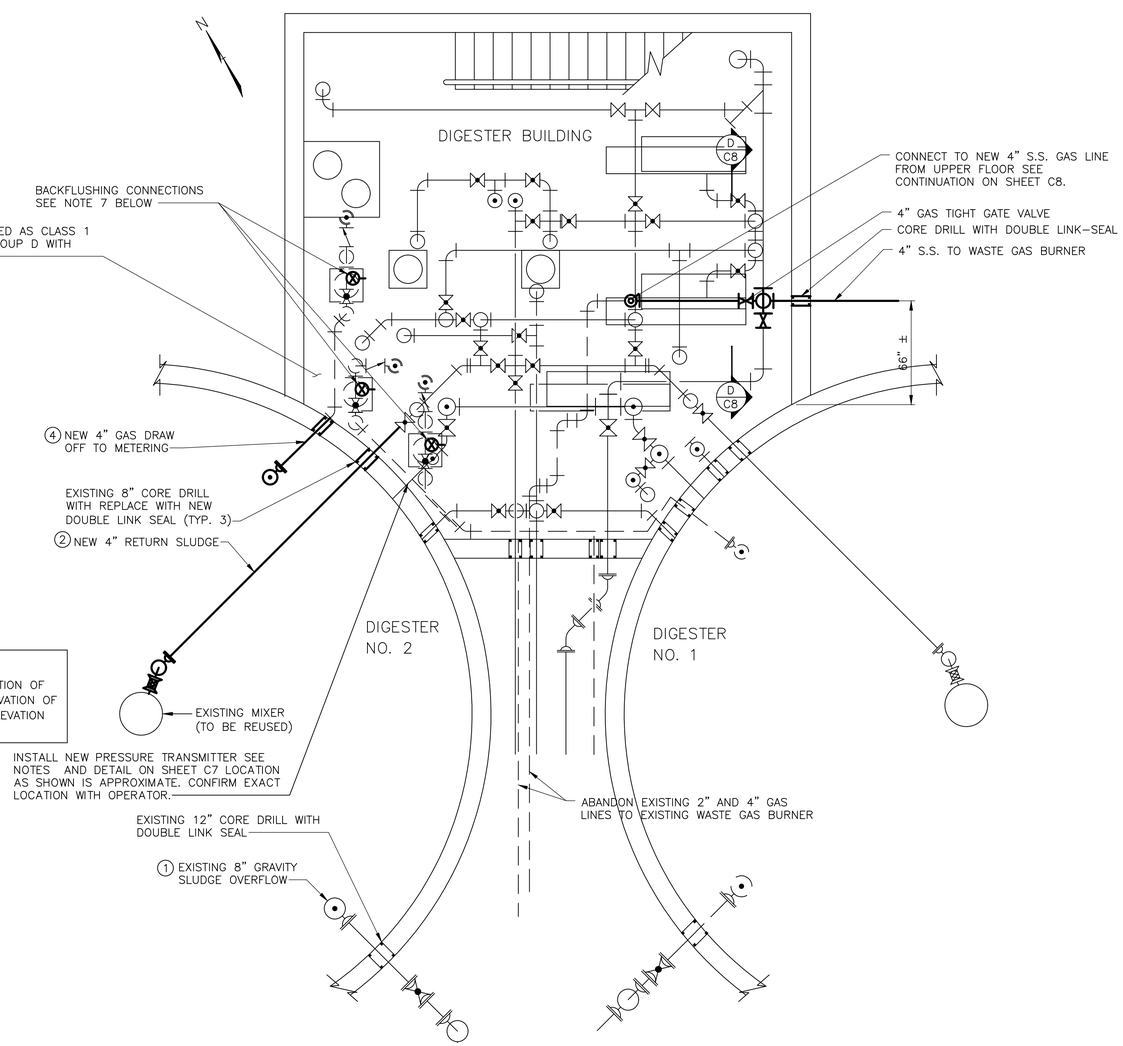

NEW COVER NOTE:

THE ELEVATION OF THE NEW COVER AT THE LOCATION OF THE CENTER MIXER SHALL MATCH THE EXACT ELEVATION OF THE OLD COVER TO RESULT IN NO CHANGE IN ELEVATION OF THE MIXER ONCE IT IS REINSTALLED.

SLUDGE/GAS PIPING PLAN BELOW ELEV. 571.00

SCALE: 1/4" = 1'-0"

SLUDGE/GAS PIPING PLAN ABOVE ELEV. 571.00

SCALE: 1/4" = 1'-0"

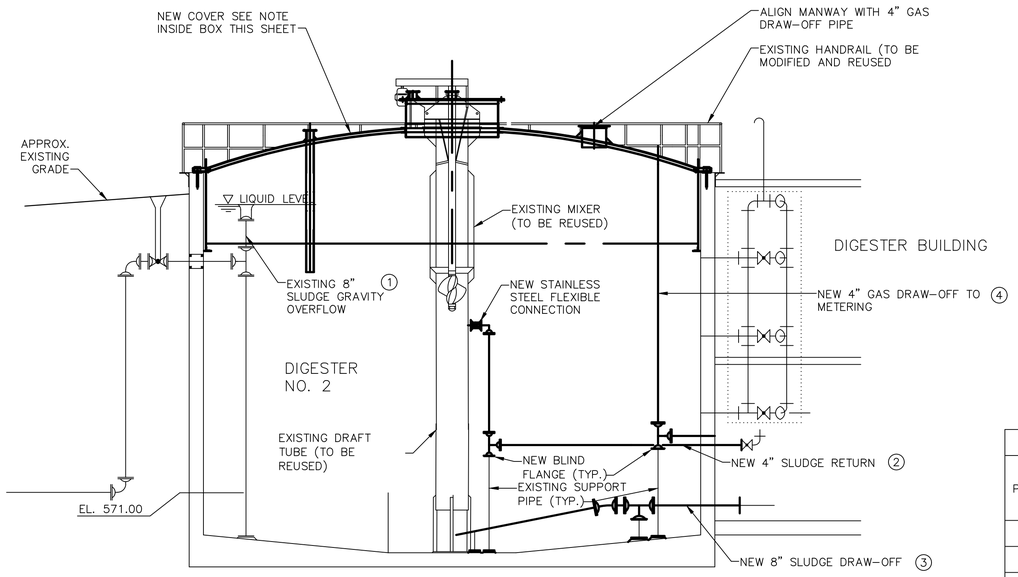

EXISTING DIGESTER NO.2 W/NEW COVER AND PIPING – SECTION

SCALE: 3/16" = 1'-0"

PIPE SCHEDULE				
PIPE ID.	SERVICE DESCRIPTION	PIPE SIZE	ELEVATION AT DIGESTER WALL PENETRATION	ELEVATION AT BUILDING WALL PENETRATION
①	~~GRAVITY SLUDGE OVERFLOW~~	~~8"~~	~~588.53~~	~~N/A~~
②	SLUDGE RETURN FROM HEATER	4"	574.36	574.36
③	SLUDGE DRAW-OFF	8"	570.11	570.11
④	PRIMARY DIGESTER GAS TO METERING	4"	575.00	575.00

NOTES:

1. ALL ELEVATIONS ARE APPROXIMATE AND CONTRACTOR SHALL FIELD VERIFY ELEVATIONS.
2. ALL GAS PIPING SHALL HAVE A MINIMUM SLOPE OF 0.02 FT/FT.
3. EQUIPMENT SHOW ON TOP OF NEW DIGESTER NO.2 COVER IS SCHEMATIC ONLY. LOCATIONS MAY VARY DEPENDING ON COVER MANUFACTURER REQUIREMENTS
4. CONTRACTOR SHALL VERIFY DIMENSIONS OF EXISTING DIGESTER CONCRETE TANKS BEFORE BEGINNING FABRICATION OF FIXED COVER ASSEMBLIES.
5. ALL INTERNAL PIPING TO BE ADEQUATELY ANCHORED AND BRACED TO PREVENT MOVEMENT CAUSED BY SLUDGE MIXING.
6. CONTRACTOR IS RESPONSIBLE FOR ANY CLEANING, PATCHING, GRINDING, ETC. NECESSARY FOR PREPARATION OF THE TOP OF THE EXISTING DIGESTER CONCRETE WALL PRIOR TO INSTALLATION OF NEW COVER
7. CONTRACTOR SHALL PROVIDE THREE (3) BACKFLUSHING CONNECTION POINTS AT THE APPROXIMATE LOCATION IDENTIFIED TO FACILITATE BACKFLUSHING SLUDGE PIPING BACK INTO EACH OF THE THREE DIGESTERS. CONFIRM EXACT LOCATION WITH OPERATOR. BACKFLUSHING CONNECTION SHALL CONSIST OF 1-1/2-INCH TAP, STAINLESS STEEL SADDLE, 1-1/2-INCH CORPORATION STOP, AND PIPING/ADAPTERS AS REQUIRED TO FACILITATE CONNECTION TO THE BACKFLUSHING CONNECTION BY THE OWNERS JETTER. COORDINATE CONNECTION DETAILS WITH OPERATOR.

ADDENDUM NO. 1

DuBois & King inc.
ENGINEERING • PLANNING • MANAGEMENT • DEVELOPMENT
28 NORTH MAIN ST.
RANDOLPH, VT 05060
TEL: (802) 728-3376
FAX: (802) 783-7101
www.dubois-king.com
SO. BURLINGTON, VT
SPRINGFIELD, VT
BEDFORD, NH
LACONIA, NH
© Copyright 2020 DuBois & King Inc.

PROFESSIONAL SEAL

BIDDING DOCUMENTS NOT FOR CONSTRUCTION

NO.	DESCRIPTION	DATE	BY	CK'D

CITY OF BARRE,
6 N MAIN ST
BARRE, VT 05641

WILLIAM E. AHEARN, P.E.

DIRECTOR OF PUBLIC WORKS AND ENGINEERING

CITY OF BARRE WASTEWATER TREATMENT FACILITY

BIOSOLIDS IMPROVEMENT PROJECT

SHEET TITLE

NEW PIPING DETAILS

DRAWN BY	DATE
EBS	DEC. 2020
CHECKED BY	D&K PROJECT #
CKG	220127 P2
PROJ. ENG.	D&K ARCHIVE #
GPH	13683

SHEET NUMBER

C6

SHEET 6 OF 9

I:\2\220127P2 Barre Digester No. 2 Study Phase\dwg\220127P2-STRU-NU01.DWG 2/24/2021 5:21 PM

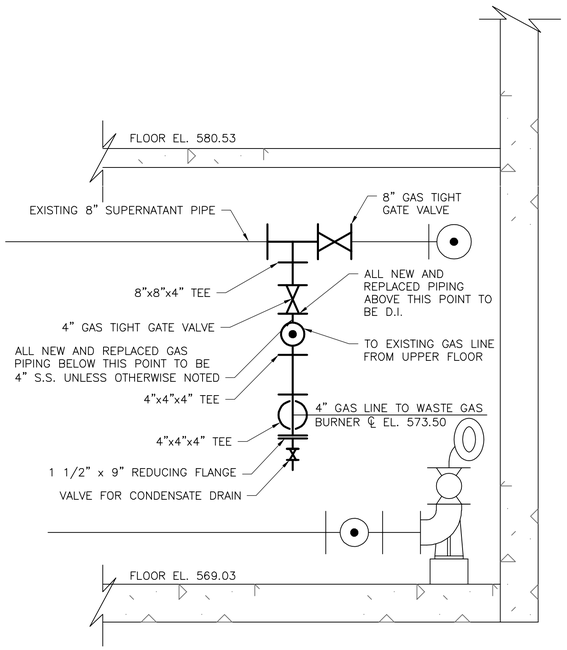

SECTION

SCALE: 1/4"=1' (D / C6)

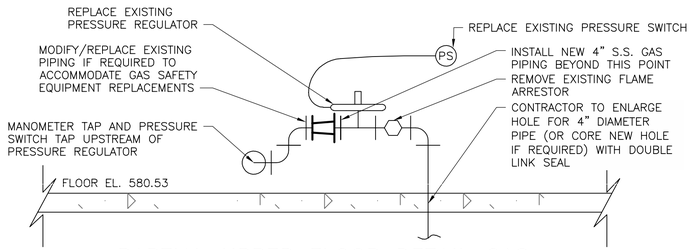

PARTIAL UPPER FLOOR DETAIL GAS SAFETY EQUIPMENT REPLACEMENTS

NOT TO SCALE

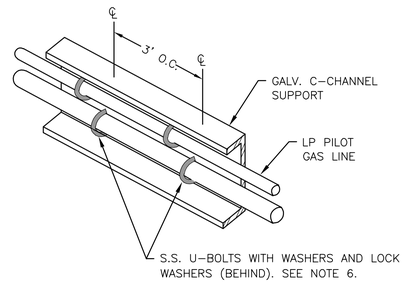

PILOT LINE SUPPORT DETAIL

SCALE: NOT TO SCALE

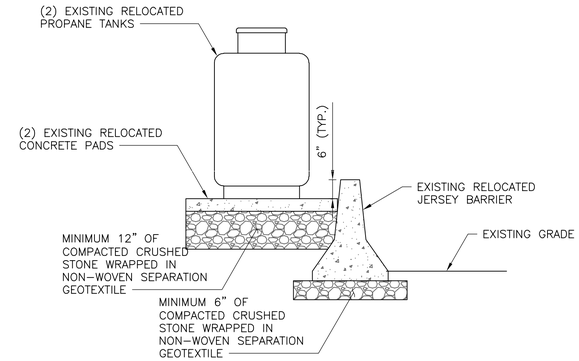

RELOCATED TANK SECTION

NOT TO SALE

NOTES:

1. ALL GAS SAFETY EQUIPMENT, FLARE, CONTROL PANEL AND APPURTENANCES SHALL BE FURNISHED BY A SINGLE MANUFACTURER.
2. ALL EQUIPMENT SHOWN ON THIS DRAWING SHALL BE MANUFACTURED BY A ENGINEER APPROVED MANUFACTURER.
3. FLEXIBLE TRANSITION COUPLINGS SHALL BE SUITABLE FOR GAS SERVICE.
4. INSTALL ALL EQUIPMENT IN ACCORDANCE WITH MANUFACTURER RECOMMENDATIONS.
5. ALL ANCHORS EXPOSED TO THE WEATHER SHALL BE 316 STAINLESS STEEL UNLESS OTHERWISE NOTED.
6. CONTRACTOR SHALL PROVIDE NON-METALLIC, UV-RESISTANT MATERIALS AT ALL CONNECTIONS TO ISOLATE THE GALVANIZED C-CHANNEL FROM GAS PIPING TO PREVENT GALVANIC CORROSION. SUBMITTAL REQUIRED.

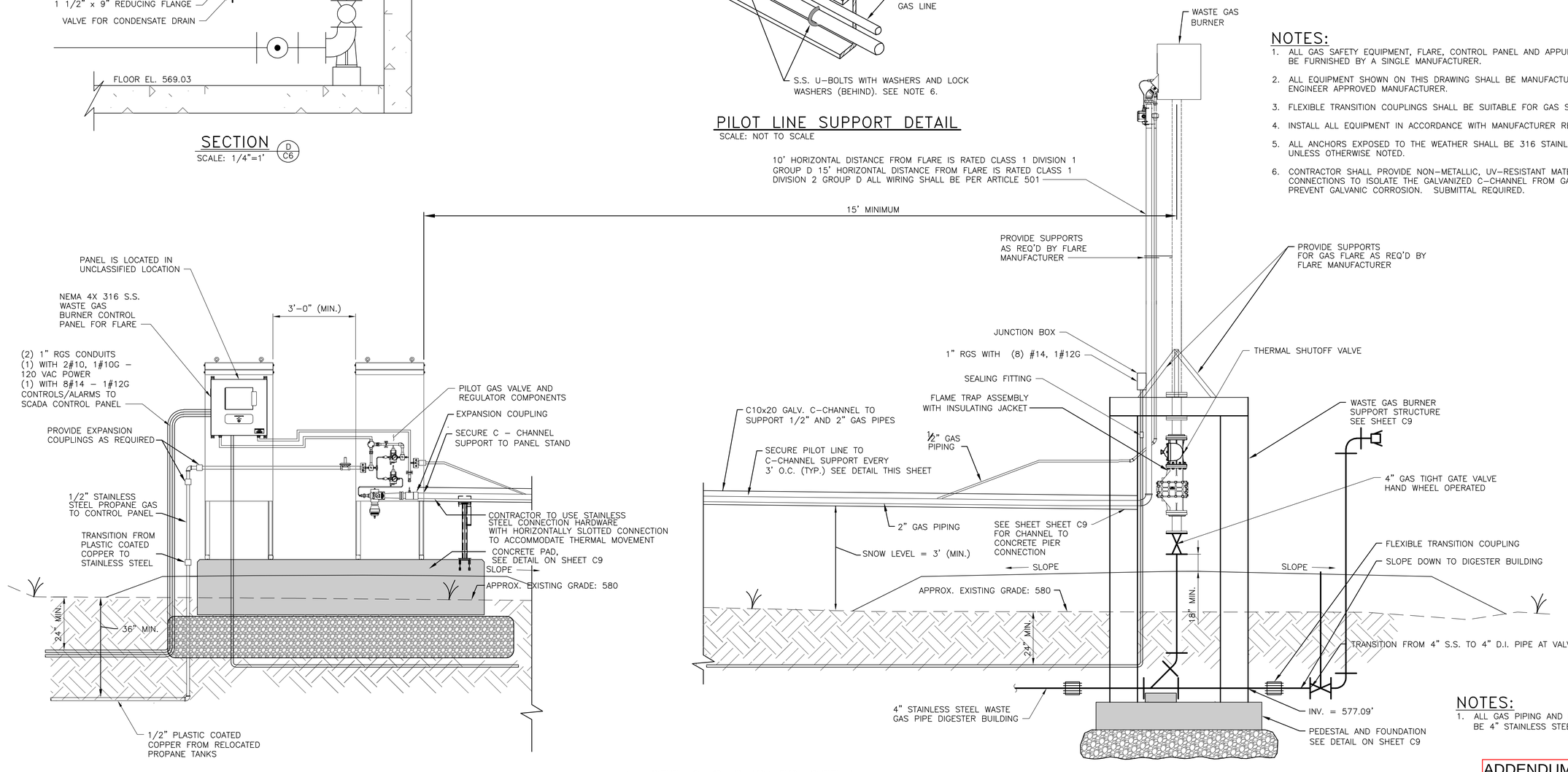

WASTE GAS BURNER DETAIL

SCALE: NOT TO SCALE

NOTES:

1. ALL GAS PIPING AND FITTINGS SHALL BE 4" STAINLESS STEEL.

ADDENDUM NO. 1

DuBois & King inc.
ENGINEERING • PLANNING • MANAGEMENT • DEVELOPMENT
28 NORTH MAIN ST.
RANDOLPH, VT 05060
TEL: (802) 728-3376
FAX: (802) 783-7101
www.dubois-king.com
SO. BURLINGTON, VT
SPRINGFIELD, VT
BEDFORD, NH
LACONIA, NH
© Copyright 2020 DuBois & King Inc.

PROFESSIONAL SEAL
STATE OF VERMONT
BIDDING DOCUMENTS NOT FOR CONSTRUCTION

NO.	DATE	DESCRIPTION	BY	CK'D

CITY OF BARRE,
6 N MAIN ST
BARRE, VT 05641

WILLIAM E. AHEARN, P.E.

DIRECTOR OF PUBLIC WORKS AND ENGINEERING

CITY OF BARRE WASTEWATER TREATMENT FACILITY

BIOSOLIDS IMPROVEMENT PROJECT

SHEET TITLE

WASTE GAS BURNER DETAILS SHEET 1 OF 2

DRAWN BY	DATE
EBS	DEC. 2020
CHECKED BY	D&K PROJECT #
CKG	220127 P2
PROJ. ENG.	D&K ARCHIVE #
GPH	13685

SHEET NUMBER

C8

SHEET 8 OF 9

I:\2\20127P2 Barre Digester No 2 Study Phase\dwg\20127P2--STRU-NU01.DWG 2/26/2021 2:16 PM

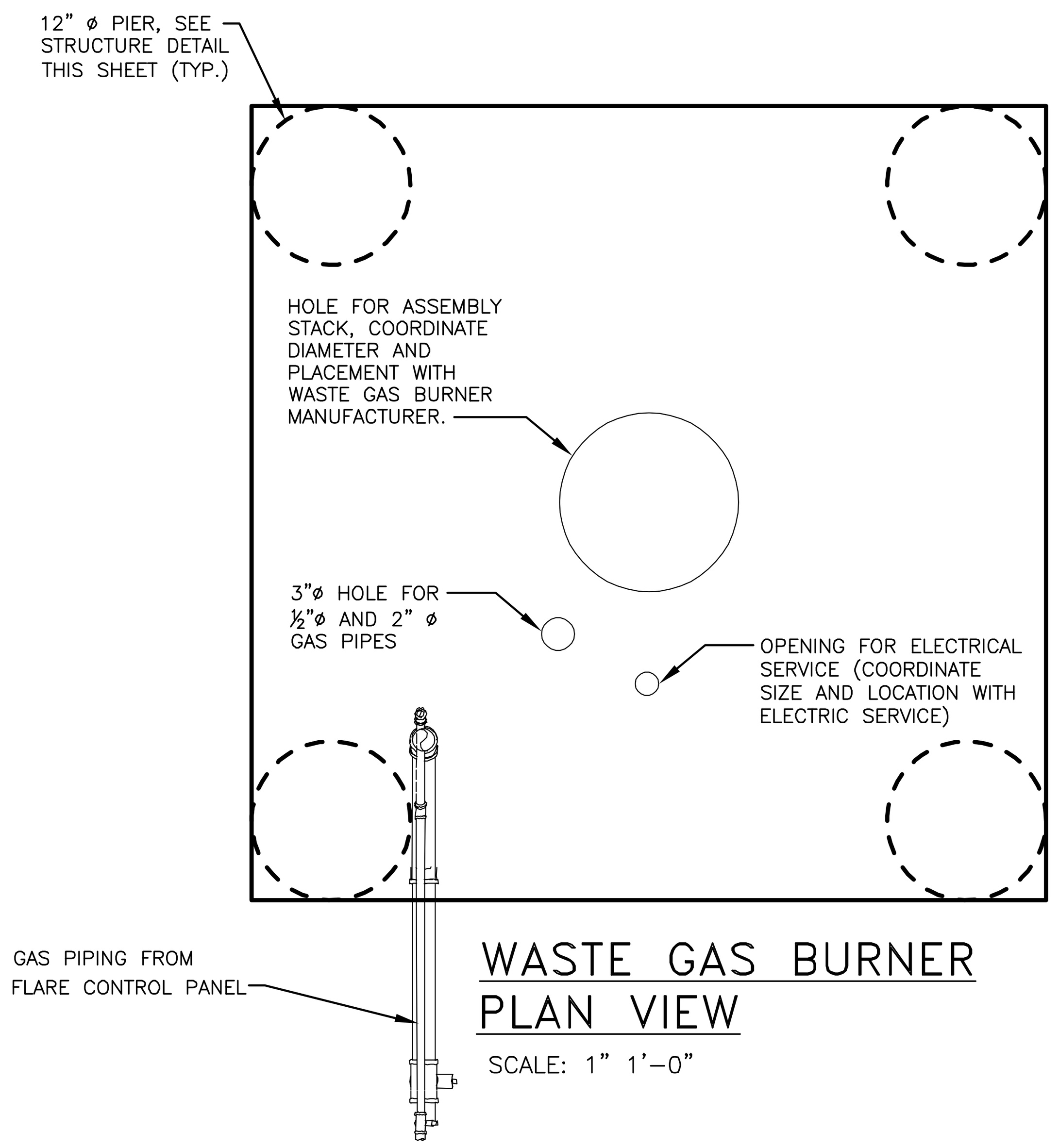

WASTE GAS BURNER PLAN VIEW

SCALE: 1" 1'–0"

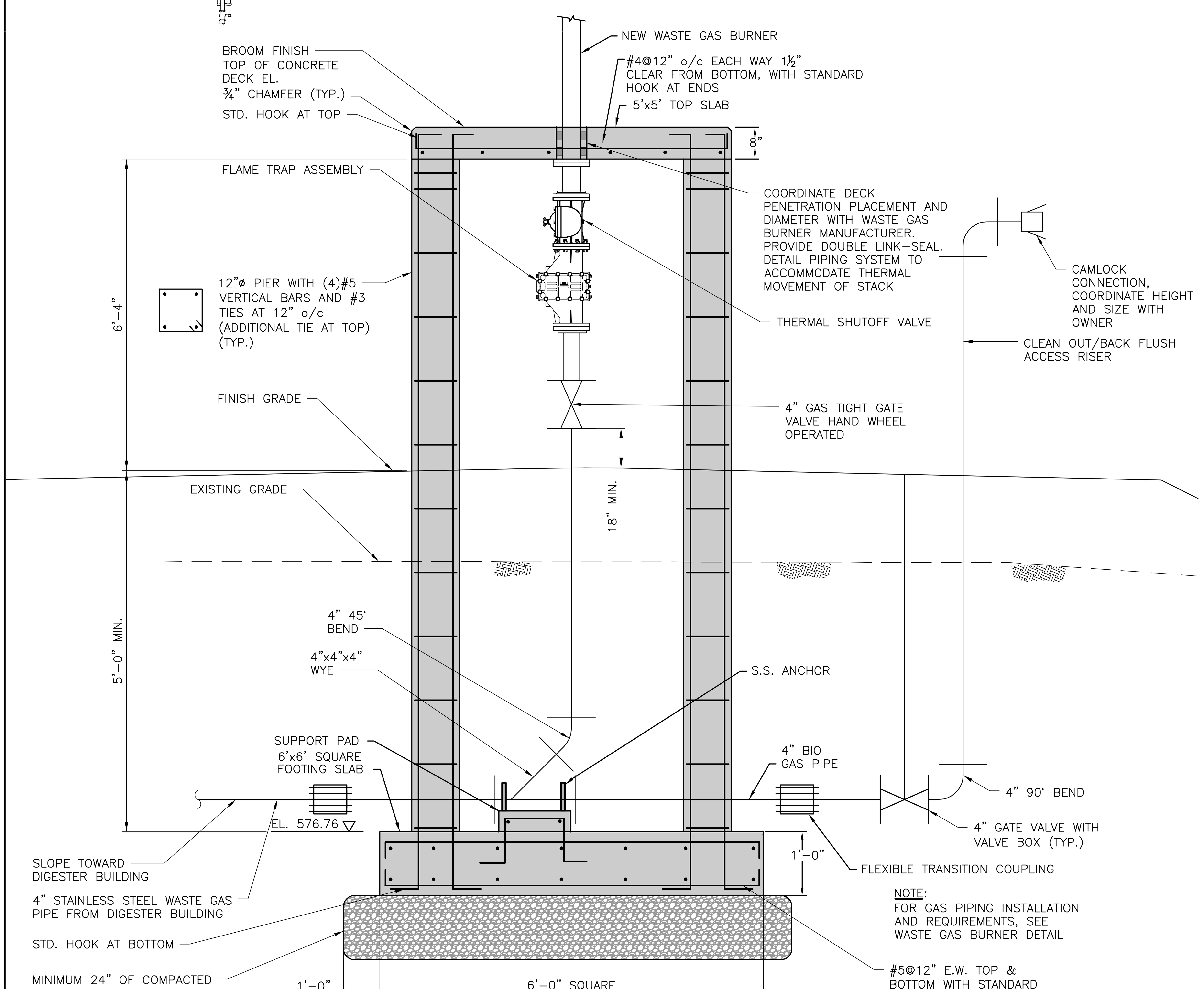

WASTE GAS BURNER SUPPORT STRUCTURE DETAIL

SCALE: NOT TO SCALE

CONCRETE

1. ALL CONCRETE SHALL CONFORM TO REQUIREMENTS AND RECOMMENDATIONS OF ACI 318 "BUILDING CODE REQUIREMENTS OF REINFORCED CONCRETE" AND ACI FIELD REFERENCE MANUAL SP–15.
2. CONCRETE WORK SHALL CONFORM TO ALL REQUIREMENTS OF ACI 301," SPECIFICATIONS FOR STRUCTURAL CONCRETE FOR BUILDINGS," EXCEPT AS MODIFIED OR SUPPLEMENTED BELOW.
3. SHOP DRAWINGS AND DATA: SUBMIT SHOP DRAWINGS COMPLYING WITH ACI SP–66 "ACI DETAILING MANUAL" AND PRODUCT DATA FOR ACCESSORIES, ADMIXTURES AND CURING COMPOUNDS.
4. MIX PROPORTIONS AND DESIGNS SHALL BE SUBMITTED FOR APPROVAL. LIMIT MAXIMUM WATER–SOLUBLE CHLORIDE ION CONTENT IN CONCRETE TO 0.15 BY WEIGHT OF CEMENT FOR CAST–IN–PLACE CONCRETE.

CONCRETE USAGE	CONCRETE STRENGTH	CONCRETE CLASS	MAX W/CM RATIO	AIR
FOOTINGS, PIERS & SLABS	4500 psi	F2, S0, W1, C1	0.45	6% +/– 1%

5. REINFORCING STEEL: ASTM A 615 GRADE 60.
6. JOINT SEALANT: SIKAFLEX 1A AS MANUFACTURED BY SIKA CORPORATION OR APPROVED EQUAL.
7. SEALANT: CONTRACTOR TO APPLY SILANE SEALER TO ALL NEW CONCRETE IN ACCORDANCE TO VTRANS ITEM 514.10.
8. ALL CONCRETE SHALL BE READY–MIX CONCRETE CONFORMING TO ASTM C 94 EXCEPT THAT ADDITION OF WATER WILL NOT BE PERMITTED.
9. ALL REINFORCING MARKED CONTINUOUS (CONT.) SHALL BE LAPPED 64 BAR DIAM. AT SPLICES AND CORNERS AND SHALL BE HOOKED OR EXTENDED 48 BAR DIAM. AT NON–CONTINUOUS ENDS.
10. REINFORCEMENT SHALL BE SECURELY TIED IN ITS PROPER PLACE BEFORE AND DURING CONCRETE PLACEMENT OPERATIONS USING APPROVED CHAIRS AND SPACERS AS REQUIRED. SLAB ON GRADE REINFORCING SHALL BE PLACED ON APPROVED CHAIRS, CONCRETE BRICKS ARE NOT ACCEPTABLE.
11. THE CONCRETE CONTRACTOR SHALL INSTALL OR GIVE OTHER TRADES AMPLE OPPORTUNITY TO INSTALL ALL ANCHORS, BOLTS, PLATES, NAILERS, SLOTS, CHASES, PIPE SLEEVES, ETC., AS REQUIRED BY THESE TRADES. THE CONTRACTOR SHALL VERIFY ALL DIMENSIONS BEFORE SETTING SCREEDS AND FORMS.
12. PROVIDE CLEARANCES FROM FACES OF CONCRETE TO REINFORCEMENT AS FOLLOWS (UNLESS NOTED OTHERWISE):
    a. CONCRETE CAST AGAINST EARTH 3" (ALL BARS)
    b. CONCRETE EXPOSED TO EARTH OR WEATHER 2" (#6 AND LARGER) 1–1/2" (#5 AND SMALLER)
14. ALL CONCRETE SHALL BE CONSOLIDATED USING MECHANICAL VIBRATING EQUIPMENT.
15. FORMED CONCRETE NOT EXPOSED TO VIEW SHALL RECEIVE A ROUGH FORM FINISH; FORMED CONCRETE EXPOSED TO VIEW SHALL RECEIVE A SMOOTH FORM FINISH.
16. CONCRETE SLABS SHALL RECEIVE A BROOM FINISH FOR EXTERIOR CONCRETE.
17. TESTING: THE CONTRACTOR WILL EMPLOY A TESTING LABORATORY TO PERFORM TESTS FOR QUALITY CONTROL DURING PLACEMENT. QUALITY CONTROL TESTING TO BE IN ACCORDANCE WITH ACI 301 REQUIREMENTS.

STRUCTURAL STEEL

1. CODES AND STANDARDS: AISC "CODE OF STANDARD PRACTICE FOR STEEL BUILDINGS AND BRIDGES;" AISC "SPECIFICATION FOR STRUCTURAL STEEL BUILDINGS" INCLUDING "COMMEN-TARY;" AWS "STRUCTURAL WELDING CODE;" COMPLY WITH APPLICABLE PROVISIONS EXCEPT AS OTHERWISE INDICATED.
2. STRUCTURAL STEEL SHALL BE AS FOLLOWS:
   A. OTHER SHAPES, BARS AND PLATES: ASTM A36
3. FABRICATION: COMPLY WITH AISC "SPECIFICATIONS" AND FINAL SHOP DRAWINGS. MARK AND MATCH□MARK UNITS FOR FIELD ASSEMBLY.
4. COMPLY WITH AWS CODE FOR PROCEDURES, APPEARANCE, AND QUALITY OF WELDS.
5. ERECTION: COMPLY WITH AISC CODE AND SPECIFICATIONS, AND MAINTAIN WORK IN SAFE AND STABLE CONDITION DURING ERECTION. PROVIDE TEMPORARY BRACING AND SHORING AS REQUIRED; REMOVE WHEN FINAL CONNECTIONS PLACED. COMPLY WITH AWS "STRUCTURAL WELDING CODE" FOR ALL WELDING.
6. ALL STEEL SHALL BE HOT DIP GALVANIZED IN ACCORDANCE WITH ASTM A123.
7. TOUCH–UP GALVANIZED COATING WHERE DAMAGED OR MISSING AND REPAIR GALVANIZING TO COMPLY WITH ASTM A780.

EARTHWORK

1. SUBMITTALS: SUBMIT TEST REPORTS ON BORROW MATERIAL, VERIFICATION OF FOOTING SUBGRADE MATERIAL, IN–PLACE SOIL DENSITY TEST AND OPTIMUM MOISTURE–MAXIMUM DENSITY CURVES.
2. EXISTING UTILITIES: LOCATE BY HAND EXCAVATION AND PROVIDE PROTECTION FROM DAMAGE. COOPERATE WITH OWNER AND CONTRACT ADMINISTRATOR FOR MAINTAINING SERVICES.
3. PROTECTIONS: PROTECT STRUCTURES, UTILITIES, SIDEWALKS, PAVEMENTS, AND OTHER FACILITIES IN AREAS OF WORK. BARRICADE OPEN EXCAVATIONS AND PROVIDE WARNING LIGHTS. SLOPE SIDES OF EXCAVATIONS AS REQUIRED FOR SAFE WORKING CONDITIONS. COMPLY WITH REGULATIONS OF AUTHORITIES HAVING JURISDICTION INCLUDING OSHA REGULATIONS FOR ALL EXCAVATION AND BACKFILLING WORK. PROVIDE SHORING AS REQUIRED.
4. CRUSHED STONE: WASHED, HARD, DURABLE ROCK MEETING THE REQUIREMENTS CALLED OUT FOR ITEM 704.06A 3/4 INCH STONE IN THE LATEST EDITION OF THE VERMONT AGENCY OF TRANSPORTATION (VTRANS) STANDARD SPECIFICATION FOR CONSTRUCTION.
5. STRUCTURAL FILL: CLEAN, WELL–GRADED SANDS AND GRAVELS MEETING THE REQUIREMENTS CALLED OUT FOR ITEM 704.08A GRANULAR BACKFILL FOR STRUCTURES IN THE LATEST EDITION OF THE VERMONT AGENCY OF TRANSPORTATION (VTRANS) STANDARD SPECIFICATION FOR CONSTRUCTION.
6. EXCAVATION: REMOVE AND DISPOSE OF MATERIAL ENCOUNTERED TO OBTAIN REQUIRED SUBGRADE ELEVATIONS.
7. BACKFILL AND FILL: PLACE BACKFILL AND FILL SOIL MATERIALS IN LAYERS NOT MORE THAN 9 INCHES IN LOOSE DEPTH, COMPACTING EACH LAYER TO REQUIRED MAXIMUM DENSITY. DO NOT PLACE MATERIALS ON SURFACES THAT ARE MUDDY, FROZEN, OR CONTAIN ICE OR FROST. USE CRUSHED STONE UNDER FOOTINGS AND SLABS AND STRUCTURAL FILL AS BACKFILL.
8. COMPACTION: COMPACT EACH LAYER OF BACKFILL AND FILL SOIL MATERIALS AND THE TOP 12 INCHES OF EXISTING SUBGRADE FOR STRUCTURES, SLABS, STEPS AND PAVEMENTS TO 95 PERCENT MAXIMUM DENSITY AS DETERMINED BY ASTM D 1557. FOR LAWN AND OTHER UNPAVED AREAS, COMPACT TO 90 PERCENT MAXIMUM DENSITY.
9. NON–WOVEN SEPARATION GEOTEXTILE: MIRAFI 180N OR APPROVED EQUAL.
10. TESTING: CONTRACTOR WILL ENGAGE SOILS TESTING AND INSPECTION SERVICE FOR QUALITY CONTROL TESTING DURING EARTHWORK OPERATIONS. TYPE AND QUANTITY OF TESTS SHALL BE AS OUTLINED IN THE SPECIFICATIONS.
11. FOUNDATION DESIGN BASED ON ASSUMED BEARING CAPACITY OF 1000 PSF

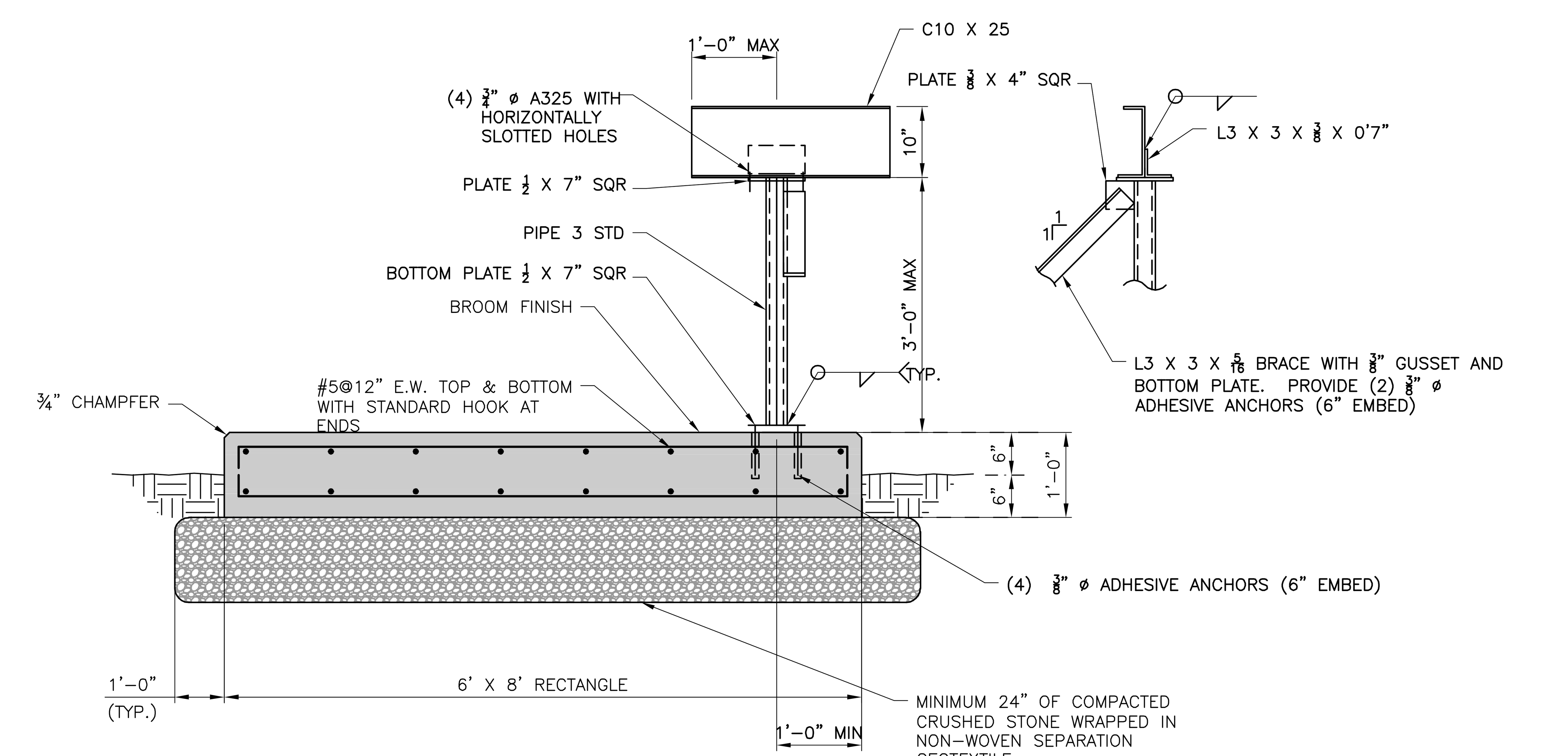

CONCRETE PAD DETAIL FOR GAS BURNER CONTROL PANEL

½"=1'–0"

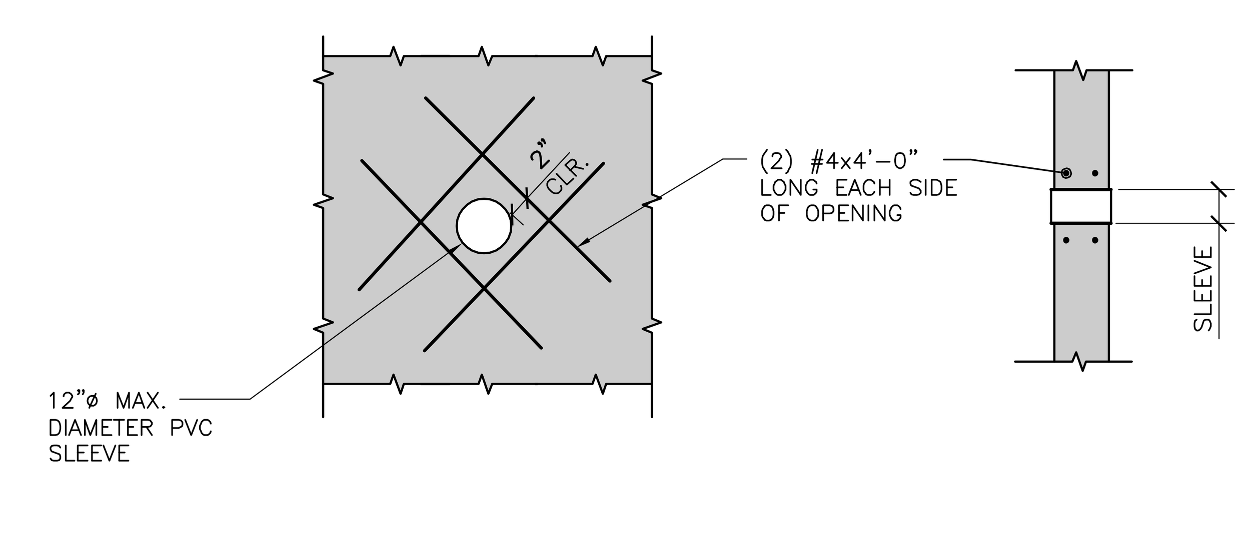

TYPICAL DETAIL: CONCRETE OPENING

SCALE: 1/2"=1'–0"

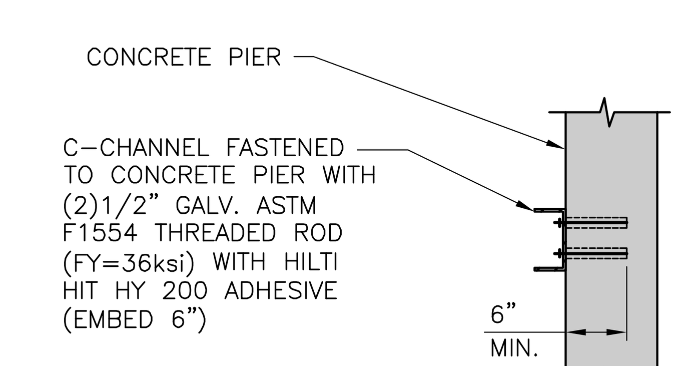

CHANNEL TO PIER CONNECTION

SCALE: 3/4"=1'–0"

ADDENDUM NO. 1

DuBois & King inc.
ENGINEERING • PLANNING • MANAGEMENT • DEVELOPMENT
28 NORTH MAIN ST.
RANDOLPH, VT 05060
TEL: (802) 728-3376
FAX: (802) 783-7101
www.dubois-king.com
SO. BURLINGTON, VT
SPRINGFIELD, VT
BEDFORD, NH
LACONIA, NH

© Copyright 2020 DuBois & King Inc.

PROFESSIONAL SEAL

BIDDING DOCUMENTS NOT FOR CONSTRUCTION

12/8/2020

NO.	DATE	DESCRIPTION	BY	CK'D

CITY OF BARRE,
6 N MAIN ST
BARRE, VT 05641

WILLIAM E. AHEARN, P.E.

DIRECTOR OF PUBLIC WORKS AND ENGINEERING

CITY OF BARRE WASTEWATER TREATMENT FACILITY

BIOSOLIDS IMPROVEMENT PROJECT

SHEET TITLE

WASTE GAS BURNER DETAILS SHEET 2 OF 2

DRAWN BY	DATE
EBS	DEC. 2020
CHECKED BY	D&K PROJECT #
CKG	220127 P2
PROJ. ENG.	D&K ARCHIVE #
GPH	13686

SHEET NUMBER

C9

I:\2\220127P2 Barre Digester No 2 Study Phase\dwg\220127P2-STRU-NU01.DWG 2/25/2021 11:30 AM

ATTACHMENT 4

SECTION 01150 - MEASUREMENT AND PAYMENT

PART 1 GENERAL

1.01 DESCRIPTION

A. This Section covers the requirements for measurements and records for payment purposes, and describes the items under which payments will be made for all work performed under this Contract.

B. Items not specified to be measured or paid for shall be included in an appropriate unit price item or in a Lump-sum item.

1.02 MEASUREMENT REQUIREMENTS

A. Where payments will be made for removing rock and existing materials, notify Engineer so that he may inspect the materials to be removed, so that he may witness the measuring, and so that he may approve the record of measurements. All materials removed without conforming to the above procedures, and which Engineer cannot verify or substantiate, will not be paid for.

B. Maintain complete, neat, clean, and legible field notes for all measured items. Notes shall contain spaces for Contractor's and Engineer's signatures plus additional space for comments. An original and a copy shall be made for all notes and one copy shall be turned over to Engineer daily. The Engineer's signature shall not be construed as an acceptance of the Work, or the measurements made, but shall mean that he was present when the measurements were made.

1.03 SUBMITTALS

A. See Section 01300.

B. Field notes of all measurements for payment purposes delivered to Engineer daily.

C. Copies of all invoices required for payments out of cash allowance(s).

D. Monthly Applications for Payment, on the forms included under contract forms.

1.04 SCHEDULING

A. Notify Engineer, as far in advance as possible, of the making of measurements so that the Engineer may observe existing conditions, work being performed, and measurements being made.

B. Allow for and afford Engineer ample time, space and equipment to observe measurements and to verify measurements and elevations.

PART 2 PRODUCTS

2.01 GENERAL

A. Provide all labor, materials, facilities, levels, measuring devices and all other equipment and items necessary to properly and accurately perform all measurements for payment purposes.

PART 3 EXECUTION

3.01 GENERAL REQUIREMENTS & STIPULATIONS

A. Perform all measuring required under this Section.

B. No separate payments will be made for work under this Contract except for the pay items stipulated in this PART 3. All costs in connection with the Work shall be included in one or more of the pay items as appropriate.

C. Each pay item shall be full compensation for all costs in connection with the item including but not limited to:
   1. The furnishing of all materials, labor, equipment, tools, and all incidentals.
   2. The installation of all materials, equipment, facilities, accessories and appurtenant items.
   3. The proper share of overhead and profit.
   4. Any excavation, trenching, backfilling, dewatering, shoring or testing required.
   5. The restoration of unpaved surfaces.
   6. Any temporary facilities or controls required including flaggers and/or uniformed traffic officers.
   7. All erosion and dust control measures.
   8. All related and incidental work and items necessary or required to complete the Work and to provide completely connected, operational and approved, code-compliant systems capable of performing as required.
   9. Clearing and grubbing.

D. Each pay item which specifically involves excavation shall be considered to include full compensation for:
   1. Excavation in earth.
   2. Disposal of any surplus.
   3. Handling of water as specified.
   4. Installation and removal of sheeting and bracing.

E. If solid rock excavation is required, additional compensation will be paid under the item Rock Excavation and Disposal, with the exception of items which specifically include payment for rock excavation.

3.02 MEASUREMENT & PAYMENT ITEMS

A. The names of the following items are abbreviated forms of the Bid Items as contained on the Price Schedule in the Bid Form. The names, as shown below or on the Bid Form, shall not be construed to represent a complete description of all of the Work included under such items and are provided only as a means of identification and for ease of conversation.

BASE BID

1. FIXED DIGESTER COVER, STAINLESS STEEL

No measurement required.

Payment shall be lump sum of all work described in the contract documents and as associated with the replacement of the existing primary digester cover and all related improvements including but not limited to removal and proper disposal of the existing cover, removing and disposal of tank contents including piping to be replaced, cleaning the existing tank, preparing the existing concrete tank for accepting the new cover, providing and installing a new stainless steel cover, installing new internal digester piping, reinstalling the existing mixer and other gas safety equipment on the roof, removal, modification and reinstalling the existing digester railing, removal/replacement of the digester level monitoring components, replacing electrical conduit and providing electrical connections and all work associated with providing a complete and operating primary digester.

2. GAS SAFETY EQUIPMENT AND RELATED IMPROVEMENTS

No measurement required.

Payment shall be lump sum of all work identified in the contract documents that is not included in Pay Item Number 1.

ALTERNATE BID

3. FIXED DIGESTER COVER, MILD STEEL

No measurement required.

Payment shall be lump sum of all work described in the contract documents and as associated with the replacement of the existing primary digester cover and all related improvements including but not limited to removal and proper disposal of the existing cover, removing and disposal of tank contents including piping to be replaced, cleaning the existing tank, preparing the existing concrete tank for accepting the new cover, providing and installing a mild steel cover, preparing mild steel cover for coating and applying coating system, installing new internal digester piping, reinstalling the existing mixer and other gas safety equipment on the roof, removal, modification and reinstalling the existing digester railing, removal/replacement of the digester level monitoring components, replacing electrical conduit and providing electrical connections and all work associated with providing a complete and operating primary digester.

4. GAS SAFETY EQUIPMENT AND RELATED IMPROVEMENTS

No measurement required.

Payment shall be lump sum of all work identified in the contract documents that is not included in Pay Item Number 3.

END OF SECTION

ATTACHMENT 5

BID FORM

CITY OF BARRE

WASTEWATER TREATMENT FACILITY

BIOSOLIDS IMPROVEMENT PROJECT

EJCDC® C-410, Bid Form for Construction Contracts.
Copyright © 2013 National Society of Professional Engineers, American Council of Engineering Companies, and American Society of Civil Engineers. All rights reserved.

TABLE OF CONTENTS

Page

ARTICLE 1 – Bid Recipient 3

ARTICLE 2 – Bidder's Acknowledgements 3

ARTICLE 3 – Bidder's Representations 3

ARTICLE 4 – Bidder's Certification 4

ARTICLE 5 – Basis of Bid 7

ARTICLE 6 – Time of Completion 9

ARTICLE 7 – Attachments to this Bid 9

ARTICLE 8 – Defined Terms 9

ARTICLE 9 – Bid Submittal 10

Copyright © 2013 National Society of Professional Engineers, American Council of Engineering Companies, and American Society of Civil Engineers. All rights reserved.

ARTICLE 1 – BID RECIPIENT

1.01 This Bid is submitted to:

City of Barre
6 North Main Street, Suite 1
Barre, VT 05641

1.02 The undersigned Bidder proposes and agrees, if this Bid is accepted, to enter into an Agreement with Owner in the form included in the Bidding Documents to perform all Work as specified or indicated in the Bidding Documents for the prices and within the times indicated in this Bid and in accordance with the other terms and conditions of the Bidding Documents.

ARTICLE 2 – BIDDER'S ACKNOWLEDGEMENTS

2.01 Bidder accepts all of the terms and conditions of the Instructions to Bidders, including without limitation those dealing with the disposition of Bid security. This Bid will remain subject to acceptance for 60 days after the Bid opening, or for such longer period of time that Bidder may agree to in writing upon request of Owner.

ARTICLE 3 – BIDDER'S REPRESENTATIONS

3.01 In submitting this Bid, Bidder represents that:

A. Bidder has examined and carefully studied the Bidding Documents, and any data and reference items identified in the Bidding Documents, and hereby acknowledges receipt of the following Addenda:

Addendum No.	**Addendum, Date**

B. Bidder has visited the Site, conducted a thorough, alert visual examination of the Site and adjacent areas, and become familiar with and satisfied itself as to the general, local, and Site conditions that may affect cost, progress, and performance of the Work.

C. Bidder is familiar with and has satisfied itself as to all Laws and Regulations that may affect cost, progress, and performance of the Work.

D. Bidder has carefully studied all: (1) reports of explorations and tests of subsurface conditions at or adjacent to the Site and all drawings of physical conditions relating to existing surface or subsurface structures at the Site that have been identified in the Supplementary Conditions, especially with respect to Technical Data in such reports and drawings, and (2) reports and drawings relating to Hazardous Environmental Conditions, if any, at or adjacent to the Site that have been identified in the Supplementary Conditions, especially with respect to Technical Data in such reports and drawings.

E. Bidder has considered the information known to Bidder itself; information commonly known to contractors doing business in the locality of the Site; information and observations obtained from visits to the Site; the Bidding Documents; and any Site-related reports and drawings

EJCDC® C-410, Bid Form for Construction Contracts.
Copyright © 2013 National Society of Professional Engineers, American Council of Engineering Companies, and American Society of Civil Engineers. All rights reserved.

identified in the Bidding Documents, with respect to the effect of such information, observations, and documents on (1) the cost, progress, and performance of the Work; (2) the means, methods, techniques, sequences, and procedures of construction to be employed by Bidder; and (3) Bidder's safety precautions and programs.

F. Bidder agrees, based on the information and observations referred to in the preceding paragraph, that no further examinations, investigations, explorations, tests, studies, or data are necessary for the determination of this Bid for performance of the Work at the price bid and within the times required, and in accordance with the other terms and conditions of the Bidding Documents.

G. Bidder is aware of the general nature of work to be performed by Owner and others at the Site that relates to the Work as indicated in the Bidding Documents.

H. Bidder has given Engineer written notice of all conflicts, errors, ambiguities, or discrepancies that Bidder has discovered in the Bidding Documents, and confirms that the written resolution thereof by Engineer is acceptable to Bidder.

I. The Bidding Documents are generally sufficient to indicate and convey understanding of all terms and conditions for the performance and furnishing of the Work.

J. The submission of this Bid constitutes an incontrovertible representation by Bidder that Bidder has complied with every requirement of this Article, and that without exception the Bid and all prices in the Bid are premised upon performing and furnishing the Work required by the Bidding Documents.

ARTICLE 4 – BIDDER'S CERTIFICATION

4.01 Bidder certifies that:

A. This Bid is genuine and not made in the interest of or on behalf of any undisclosed individual or entity and is not submitted in conformity with any collusive agreement or rules of any group, association, organization, or corporation;

B. Bidder has not directly or indirectly induced or solicited any other Bidder to submit a false or sham Bid;

C. Bidder has not solicited or induced any individual or entity to refrain from bidding; and

D. Bidder has not engaged in corrupt, fraudulent, collusive, or coercive practices in competing for the Contract. For the purposes of this Paragraph 4.01.D:

1. "corrupt practice" means the offering, giving, receiving, or soliciting of any thing of value likely to influence the action of a public official in the bidding process;

2. "fraudulent practice" means an intentional misrepresentation of facts made (a) to influence the bidding process to the detriment of Owner, (b) to establish bid prices at artificial non-competitive levels, or (c) to deprive Owner of the benefits of free and open competition;

3. "collusive practice" means a scheme or arrangement between two or more Bidders, with or without the knowledge of Owner, a purpose of which is to establish bid prices at artificial, non-competitive levels; and

4. "coercive practice" means harming or threatening to harm, directly or indirectly, persons or their property to influence their participation in the bidding process or affect the execution of the Contract.

Copyright © 2013 National Society of Professional Engineers, American Council of Engineering Companies, and American Society of Civil Engineers. All rights reserved.

E. **Disclosure of Lobbying Activities - In conformance with 45 CFR Part 604, the Bidder certifies, to the best of his or her knowledge and belief, that:**

1. **No Federal appropriated funds have been paid or will be paid, by or on behalf of the undersigned, to any person for influencing or attempting to influence an officer or employee of any agency, a Member of Congress, an officer or employee of Congress, or an employee of a Member of Congress in connection with the awarding of any Federal contract, the making of any Federal grant or Federal loan, and the extension, continuation, renewal, amendment, or modification of any Federal contract, grant or loan.**

2. **If any funds other than Federal appropriated funds have been paid or will be paid to any person for influencing or attempting to influence an officer or employee of any agency, a Member of Congress, an officer or employee of Congress, or an employee of a Member of Congress in connection with this Federal contract, grant or loan, the undersigned shall complete and submit Standard Form – LLL, "Disclosure of Lobbying Activities," in accordance with its instructions.**

3. **The Bidder shall require that the language of this certification be included in the award documents for all sub-awards at all tiers (including contracts, subcontracts, and sub-grants under grants and loans) and that all sub-recipients shall certify and disclose accordingly.**

4. **This certification is a material representation of fact upon which reliance was placed when this transaction was made or entered into. Submission of this certification is a prerequisite for making or entering into this transaction imposed by section 1352, title 31, U.S. Code. Any person who fails to file the required certification shall be subject to a civil penalty of not less than $10,000 and not more than $100,000 for each such failure.**

F. **Certification Regarding Debarment, Suspension, Ineligibility – The Bidder certifies that neither it nor its principals is presently debarred, suspended, proposed for debarment, declared ineligible, or voluntarily excluded from participation in this transaction by any Federal department or agency. Where the Bidder is unable to certify to any of the statements in this certification, the undersigned shall attach an explanation to this proposal.**

G. **Notice to Labor Unions or other Organizations of Workers (Non-Discrimination In Employment) - The Bidder hereby agrees to the following conditions:**

1. **It will incorporate or cause to be incorporated into any contract for construction work, or modification thereof, paid for in whole or in part with funds obtained from the Federal Government pursuant to a grant, contract, loan, insurance, or guarantee, or undertaken pursuant to any Federal program involving such grant, contract, loan, insurance, or guarantee, the provisions prescribed for Government contracts and Federally assisted construction contracts by Sections 202 and 301 of Executive Order 11246, as amended.**

2. **It will assist and cooperate actively with the Environmental Protection Agency and the Secretary of Labor in obtaining the compliance of Contractors and Subcontractors with said contract provisions and with the rules, regulations, and relevant orders of the Secretary.**

3. **It will obtain and furnish to the Environmental Protection Agency and to the Secretary of Labor such information as they may require for the supervision of such compliance.**

EJCDC® C-410, Bid Form for Construction Contracts.
Copyright © 2013 National Society of Professional Engineers, American Council of Engineering Companies, and American Society of Civil Engineers. All rights reserved.

4. **It will enforce the obligations of Contractors and Subcontractors under such provisions, rules, regulations and orders.**

5. **It will carry out sanctions and penalties for violations of such obligations imposed upon Contractors and Subcontractors by the Secretary of Labor or the Environmental Protection Agency.**

6. **It will refrain from entering into any contract subject to this Order or extension or other modification of such a contract with a Contractor or Subcontractor debarred from Government contracts and Federally assisted construction contracts under Part II, Subpart D of this Order, and**

7. **In the event that he fails and refuses to comply with his undertakings, the Bidder agrees that the Environmental Protection Agency may cancel, terminate, or suspend in whole or in part this grant (contract, loan, insurance, or guarantee), may refrain from extending any further assistance under any of its programs subject to Executive Order 11246, as amended, until satisfactory assurance of future compliance has been received from such Bidder, or may refer the case to the Department of Justice for appropriate legal proceedings.**

H. **Certification of Non-Segregated Facilities – The Bidder certifies that he does not maintain or provide for his employees any segregated facilities at any of his establishments, and that he does not permit his employees to perform their services at any location, under his control, where segregated facilities are maintained. The Bidder certifies further that he will not maintain or provide for his employees any segregated facilities at any of his establishments, and that he will not permit his employees to perform their services at any location, under his control, where segregated facilities are maintained. The Bidder agrees that a breach of this certification is a violation of the Equal Opportunity clause in this contract. As used in this certification, the term segregated facilities means any waiting rooms, work areas, rest rooms and wash rooms, restaurants and other eating areas, time clocks, locker rooms and other storage or dressing areas, parking lots, drinking fountains, recreation or entertainment areas, transportation, and housing facilities provided for employees which are segregated by explicit directive or are in fact segregated on the basis of race, creed, color, or national origin, because of habit, local custom, or otherwise. The Bidder agrees that (except where he has obtained identical certifications from proposed Subcontractors for specific time periods) he will obtain identical certifications from proposed Subcontractors prior to the award of subcontracts exceeding $10,000 which are not exempt from the provisions of the Equal Opportunity clause, and that he will retain such certifications in his files.**

Copyright © 2013 National Society of Professional Engineers, American Council of Engineering Companies, and American Society of Civil Engineers. All rights reserved.

ARTICLE 5 – BASIS OF BID

5.01 Bidder will complete the Work in accordance with the Contract Documents for the following price(s):

==========

Item No.	Brief Description - Unit or Lump Sum Price (in both words and numerals)	Estimated Quantity	Total Price φ (in numerals)

BASE BID:

1. **Fixed Digester Cover, STAINLESS STEEL, per lump sum;**

_____Dollars and 1 L.S.

_____ Cents ($_____) $_____

2. **Gas Safety Equipment and Related Improvements, per lump sum;**

_____Dollars and 1 L.S.

_____ Cents ($_____) $_____

Total of All LUMP SUM Bid Items **(BASE BID)** ($_____)Φ

_____ Dollars

EJCDC® C-410, Bid Form for Construction Contracts.
Copyright © 2013 National Society of Professional Engineers, American Council of Engineering Companies, and American Society of Civil Engineers. All rights reserved.

Item No.	Brief Description - Unit or Lump Sum Price (in both words and numerals)	Estimated Quantity	Total Price φ (in numerals)

ALTERNATE BID:

3. **Fixed Digester Cover, MILD STEEL, per lump sum;**

_____Dollars and 1 L.S.

_____ Cents ($_____) $_____

4. **Gas Safety Equipment and Related Improvements, per lump sum;**

_____Dollars and 1 L.S.

_____ Cents ($_____) $_____

Total of All LUMP SUM Bid Items **(ALTERNATE BID)** ($_____)Φ

_____ Dollars

Notes:

1. Bids will be evaluated based on the **Base** Bid. If all Base Bids are rejected by the Owner, the bids will be evaluated based on the **Alternate** Bid.
2. Bidder acknowledges that (a) each Bid Unit Price includes an amount considered by Bidder to be adequate to cover Contractor's overhead and profit for each separately identified item, and (b) estimated quantities are not guaranteed, and are solely for the purpose of comparison of Bids, and final payment for all unit price Bid items will be based on actual quantities, determined as provided in the Contract Documents.
3. Unit Prices have been computed in accordance with Paragraph 13.03.B of the General Conditions.
4. In the event that there is a discrepancy between the lump sum or unit prices written in words and figures, the prices written in words shall govern.
5. BIDDERS must bid on each item. All entries in the entire BID must be made clearly and in ink; prices bid must be written in both words and figures.
6. Bidders must insert extended item prices obtained from quantities and unit prices.
7. Bids shall include all applicable taxes and fees.

Φ – For informational comparison only.
* - Indeterminate, Quantity assumed for comparison bids

EJCDC® C-410, Bid Form for Construction Contracts.
Copyright © 2013 National Society of Professional Engineers, American Council of Engineering Companies, and American Society of Civil Engineers. All rights reserved.

ARTICLE 6 – TIME OF COMPLETION

6.01 Bidder agrees that the Work will be substantially complete and will be completed and ready for final payment in accordance with Paragraph 15.06 of the General Conditions on or before the dates or within the number of calendar days indicated in the Agreement.

6.02 Bidder accepts the provisions of the Agreement as to liquidated damages.

ARTICLE 7 – ATTACHMENTS TO THIS BID

7.01 The following documents are submitted with and made a condition of this Bid:

A. Required Bid security; **(A Certified Check or Bid Bond for 5% of the Total Amount of Bid).**

B. **Evidence of authority to do business in the state of the Project; or a written covenant to obtain such license within the time for acceptance of Bids;**

C. **Required "Bidder Qualification Statement with Supporting Data";**

D. **Current Non-Debarment Certification, or as an interim step, a written certifying statement to address the items identified in the Advertisement.**

~~E. EPA Form 6100-3 (DBE Subcontractor Performance Form) and EPA Form 6100-4 (DBE Subcontractor Utilization Form).~~

~~F. Compliance Certification Statement.~~

NOTE: ALL ITEMS A THROUGH ~~E~~ D MUST BE CLEARLY SUBMITTED WITH THIS BID OR BIDDER WILL BE DETERMINED AS NON-RESPONSIVE.

ARTICLE 8 – DEFINED TERMS

8.01 The terms used in this Bid with initial capital letters have the meanings stated in the Instructions to Bidders, the General Conditions, and the Supplementary Conditions.

Copyright © 2013 National Society of Professional Engineers, American Council of Engineering Companies, and American Society of Civil Engineers. All rights reserved.

ARTICLE 9 – BID SUBMITTAL

BIDDER: *[Indicate correct name of bidding entity]*

_____

By:
[Signature] _____

[Printed name] _____
(If Bidder is a corporation, a limited liability company, a partnership, or a joint venture, attach evidence of authority to sign.)

Attest:
[Signature] _____

[Printed name] _____

Title: _____

Submittal Date: _____

Address for giving notices:

_____

_____

_____

Telephone Number: _____

Fax Number: _____

Contact Name and e-mail address: _____

_____

Bidder's License No.: _____
(where applicable)

NOTE TO USER: Use in those states or other jurisdictions where applicable or required.

Copyright © 2013 National Society of Professional Engineers, American Council of Engineering Companies, and American Society of Civil Engineers. All rights reserved.

THIS PAGE INTENTIONALLY LEFT BLANK

EJCDC® C-410, Bid Form for Construction Contracts.
Copyright © 2013 National Society of Professional Engineers, American Council of Engineering Companies, and American Society of Civil Engineers. All rights reserved.

I am the undersigned BIDDER or prospective CONTRACTOR and I certify that I am in compliance with the following documents which are a part of this contract:

45 CFR Part 604 DISCLOSURE OF LOBBYING ACTIVITIES

The undersigned certifies, to the best of his or her knowledge and belief, that:

1. No Federal appropriated funds have been paid or will be paid, by or on behalf of the undersigned, to any person for influencing or attempting to influence an officer or employee of any agency, a Member of Congress, an officer or employee of Congress, or an employee of a Member of Congress in connection with the awarding of any Federal contract, the making of any Federal grant or Federal loan, and the extension, continuation, renewal, amendment, or modification of any Federal contract, grant or loan.

2. If any funds other than Federal appropriated funds have been paid or will be paid to any person for influencing or attempting to influence an officer or employee of any agency, a Member of Congress, an officer or employee of Congress, or an employee of a Member of Congress in connection with this Federal contract, grant or loan, the undersigned shall complete and submit Standard Form – LLL, "Disclosure of Lobbying Activities," in accordance with its instructions.

3. The undersigned shall require that the language of this certification be included in the award documents for all sub-awards at all tiers (including contracts, subcontracts, and sub-grants under grants and loans) and that all sub-recipients shall certify and disclose accordingly.

This certification is a material representation of fact upon which reliance was placed when this transaction was made or entered into. Submission of this certification is a prerequisite for making or entering into this transaction imposed by section 1352, title 31, U.S. Code. Any person who fails to file the required certification shall be subject to a civil penalty of not less than $10,000 and not more than $100,000 for each such failure.

CERTIFICATION REGARDING DEBARMENT, SUSPENSION, INELIGIBILITY

The undersigned certifies, by submission of this proposal, that neither it nor its principals is presently debarred, suspended, proposed for debarment, declared ineligible, or voluntarily excluded from participation in this transaction by any Federal department or agency.

Where the undersigned is unable to certify to any of the statements in this certification, the undersigned shall attach an explanation to this proposal.

NOTICE TO LABOR UNIONS OR OTHER ORGANIZATIONS OF WORKERS (NON-DISCRIMINATION IN EMPLOYMENT)

The BIDDER hereby agrees to the following conditions:

1. It will incorporate or cause to be incorporated into any contract for construction work, or modification thereof, paid for in whole or in part with funds obtained from the Federal Government pursuant to a grant, contract, loan, insurance, or guarantee, or undertaken pursuant to any Federal program involving such grant, contract, loan, insurance, or guarantee, the provisions prescribed for Government contracts and Federally assisted construction contracts by Sections 202 and 301 of Executive Order 11246, as amended.

2. It will assist and cooperate actively with the Environmental Protection Agency and the Secretary of Labor in obtaining the compliance of CONTRACTORs and SUBCONTRACTORs with said contract provisions and with the rules, regulations, and relevant orders of the Secretary.

3. It will obtain and furnish to the Environmental Protection Agency and to the Secretary of Labor such information as they may require for the supervision of such compliance.

Copyright © 2013 National Society of Professional Engineers, American Council of Engineering Companies, and American Society of Civil Engineers. All rights reserved.

4. It will enforce the obligations of CONTRACTORs and SUBCONTRACTORs under such provisions, rules, regulations and orders.

5. It will carry out sanctions and penalties for violations of such obligations imposed upon CONTRACTORs and SUBCONTRACTORs by the Secretary of Labor or the Environmental Protection Agency.

6. It will refrain from entering into any contract subject to this Order or extension or other modification of such a contract with a CONTRACTOR or sub-CONTRACTOR debarred from Government contracts and Federally assisted construction contracts under Part II, Subpart D of this Order, and

7. In the event that he fails and refuses to comply with his undertakings, the BIDDER agrees that the Environmental Protection Agency may cancel, terminate, or suspend in whole or in part this grant (contract, loan, insurance, or guarantee), may refrain from extending any further assistance under any of its programs subject to Executive Order 11246, as amended, until satisfactory assurance of future compliance has been received from such BIDDER, or may refer the case to the Department of Justice for appropriate legal proceedings.

CERTIFICATION OF NON-SEGREGATED FACILITIES

The federally assisted construction CONTRACTOR certifies that he does not maintain or provide for his employees any segregated facilities at any of his establishments, and that he does not permit his employees to perform their services at any location, under his control, where segregated facilities are maintained. The federally assisted construction CONTRACTOR certifies further that he will not maintain or provide for his employees any segregated facilities at any of his establishments, and that he will not permit his employees to perform their services at any location, under his control, where segregated facilities are maintained. The federally assisted construction CONTRACTOR agrees that a breach of this certification is a violation of the Equal Opportunity clause in this contract. As used in this certification, the term **segregated facilities** means any waiting rooms, work areas, rest rooms and wash rooms, restaurants and other eating areas, time clocks, locker rooms and other storage or dressing areas, parking lots, drinking fountains, recreation or entertainment areas, transportation, and housing facilities provided for employees which are segregated by explicit directive or are in fact segregated on the basis of race, creed, color, or national origin, because of habit, local custom, or otherwise. The federally assisted construction CONTRACTOR agrees that (except where he has obtained identical certifications from proposed SUBCONTRACTORs for specific time periods) he will obtain identical certifications from proposed SUBCONTRACTORs prior to the award of subcontracts exceeding $10,000 which are not exempt from the provisions of the Equal Opportunity clause, and that he will retain such certifications in his files.

By signing this BID, the BIDDER certifies that the BIDDER complies with the following Federal requirements:

- 45 CFR Part 604 – Disclosure of Lobbying Activities
- Certification regarding Debarment, Suspension, and Ineligibility Statement
- Notice to Labor Unions or other Organizations of Workers
- Certification of Non-Segregated Facilities

Copyright © 2013 National Society of Professional Engineers, American Council of Engineering Companies, and American Society of Civil Engineers. All rights reserved.

NOTE: The penalty for making false statements in offers is prescribed is 18 U.S.C. 1001

I ☐ have, ☐ have not (check one), participated in a previous contract or subcontract subject to Executive order No. 11246, as amended, (regarding equal employment opportunity) or a preceding similar Executive Order. See the following for Executive Order No. 11246:
http://www.dol.gov/ofccp/regs/statutes/eo11246.htm

Respectfully submitted:

_____
_____
Print or Type Name Title

_____
_____
Phone # Company Name Address

(SEAL - if BID is by a corporation) _____ _____
Signature Email

_____ _____
License Number (if applicable) (Attest)

Dated this _____ day of _____, 20_____

EJCDC® C-410, Bid Form for Construction Contracts.
Copyright © 2013 National Society of Professional Engineers, American Council of Engineering Companies, and American Society of Civil Engineers. All rights reserved.

THIS PAGE INTENTIONALLY LEFT BLANK

EJCDC® C-410, Bid Form for Construction Contracts.
Copyright © 2013 National Society of Professional Engineers, American Council of Engineering Companies, and American Society of Civil Engineers. All rights reserved.

Bidder Qualification Statement with Supporting Data

The Bidder is requested to state below what works of a similar character to that included in the proposed contract he has done to give references that will enable the Owner to judge his experience, skill, and business standing.

All questions must be answered and the data given must be clear and comprehensive. This statement must be notarized. If necessary, add separate sheets.

1. Name of Bidder.

2. Permanent Main Office address.

3. When organized?

4. Is bidder registered with the Secretary of the State to do business in Vermont?

5. How many years have you engaged in the contracting business under your present firm name?

6. Have you ever failed to complete any work awarded you in the scheduled contract time, including approved time extensions? ___ (Yes) ____(No).
   If so, where and why?

7. Have you ever defaulted on a contract? ____(Yes) ____(No).
   If so, where and why?

8. Have you every had liquidated damages assessed on a contract? _____(Yes) _____(No).
   If so, where and why?

9. List your key personnel such as Project Superintendent and foreman available for this contract.

10. Provide references for three similar projects.

    Project Description:

    Project Location: Year Completed:

    Contact Name: Position:

    Contact Email:

    Project Description:

Copyright © 2013 National Society of Professional Engineers, American Council of Engineering Companies, and American Society of Civil Engineers. All rights reserved.

Project Location: Year Completed:

Contact Name: Position:

Contact Email:

Project Description:

Project Location: Year Completed:

Contact Name: Position:

Contact Email:

NOTE: Bidders may be required to furnish their latest financial statement as part of the award process.

Respectively submitted:

_____	_____
Signature	Address
_____	_____
Title	Date

_____ Being duly sworn, deposes and says that he is _____ of _____
Name of Organization
_____and that the answers to the foregoing questions and all statements contained therein are true and correct.

Sworn to before me this _____ day of _____, 2021

_____
Notary Public

My commission expires _____

(Seal – If BID is by Corporation)

ATTEST:_____

EJCDC® C-410, Bid Form for Construction Contracts.
Copyright © 2013 National Society of Professional Engineers, American Council of Engineering Companies, and American Society of Civil Engineers. All rights reserved.