ADDENDUM NO. 1
May 5, 2022
224383

RE: **MOUNTAIN WASTEWATER TREATMENT, INC.**
TERTIARY FILTER REPLACEMENT

FROM: DuBOIS & KING, INC.
P.O. Box 339
Randolph, Vermont 05060
(802) 728-3376

TO: **Prospective Bidders**

This Addendum forms part of the Contract Documents and modifies the original Bidding Documents issued by Mountain Wastewater Treatment, Inc., for the Tertiary Filter Replacement project dated April, 2022. **Acknowledge receipt of this Addendum in the space provided on Page 1 of the Bid Form. Failure to do so will subject the Bidder to disqualification.**

I. Pre-Bid Meeting

A MANDATORY Pre-Bid meeting was held at the Mountain Wastewater Treatment Facility on April 20, 2022 at 10:00 a.m. Attendees are listed on the attached Pre-Bid Meeting Attendance Log (see **Attachment A**). Bids will be opened only from bidders whose firm name appears on this Attendance Log. Chuck Goodling, P.E., of DuBois & King, Inc. described key elements of the project. **The following addresses questions received at the pre-bid meeting, as well as subsequent questions from prospective bidders.**

II. Questions & Answers

Question 1: What is the Engineers opinion of probable cost?

Answer 1: $650,000 to $750,000, which does not include the cost of the filters and blowers, which are being directly purchased by the Owner.

Question 2: Reference drawing C-3. Please indicate the depth of bury required for the below grade air piping.

Answer 2: Buried air piping shall have a minimum cover of 3-feet.

Question 3: Please furnish a specification for the interior wastewater and air piping required.

Answer 3: Refer to Pipe Schedule 02605 and notes on plans. Interior air piping in New Blower Building shall be Sch 40 black iron pipe. Interior air and wastewater piping shall match existing (generally, ductile iron flanged piping).

Question 4: Please furnish a flow diagram to indicate which valves and specialty items are to be furnished with the filters and which items are to be contractor furnished.

Answer 4: Valves and specialty items to be furnished with the filters are listed under "BASE SCOPE" in the "Graver Water Systems, Sugarbush-Filter Replacement Monoscour Filter System (Project No. 112021), Proposal No. 14-005 Rev 8, dated January 26, 2022" document provided in the Special Conditions Attachments (see below for excerpt).

BASE SCOPE

- Two (2) Single Compartment Monoscour gravity filter 6'-0" Diameter x 16'-0".(Not including roof)
- One (1) lot of valves includes:*
  Four (4) 3" Automatic Butterfly Valves (Outlet. Backwash Inlet Valves)
  Two (2) 3" Automatic Butterfly Valves (Air Inlet Valves)
  Two (2) 2" Automatic Butterfly Valves (Drain down Valves)
  Two (2) 2" Manual Ball Valves (Manual Drain Valve)
  Two (2) 2" Check Vent Valves
- One (1) lot Shipped loose piping for vent.for two (2) Single compartment Monoscours
- One (1) lot of AWS strainers (143 Strainers) for two (2) Single Compartment Monoscour
- One (1) lot of 57 cubic feet of FS-45 filter Sand for two (2) Single Compartment Monoscour
- One (1) lot of 57 cubic feet of FA-112 Anthracite for two (2) Single Compartment Monoscour
- Two (2) Solenoid Valve cabinet one for each Monoscour filters
- One (1) lot instrumentation to include level switch, pressure gauge, pressure switch.

Question 5: Will the cost of start-up services by the manufactures be paid for by the owner?

Answer 5: Yes, the cost of start-up and operator training services will be paid directly by the Owner and shall not be accounted for in this bid. The Contractor shall coordinate with the Owner in advance to identify appropriate times for these activities to be provided by the Manufacturer, and cooperate with Manufacturer and Owner to accomplish the necessary inspections.

Question 6: Are shop drawings of the filter to be removed available?

Answer 6: A single drawing (plan, elevation, details) for the existing filter is available (see **Attachment D**).

Question 7: Are shop drawings / installation instructions available for the new filters?

Answer 7: **DRAFT s**hop drawings and installation instruction are available for the new filters (see **Attachment B**). The contractor is responsible for all activities associated with providing fully assembled, installed and functioning filters.

Question 8: What is the weight of the existing and new filters?

Answer 8: Shipping Weights: Existing Filter = unknown, New Filter = 5,000 lbs
Flooded Weights: Existing Filter = 64,000 lbs, New Filter = 38,500 lbs

Question 9: Please indicate the materials of the construction of the roof, ceiling, and insulation to be removed and replaced above the filters.

Answer 9: Existing materials of construction: roof = galvanized metal roofing
ceiling = painted ½-plywood,
insulation = fiberglass batt insulation.
Replacement materials shall match existing materials.

Question 10: Will a coat of finish paint be required to be field applied on the exterior of the filter vessels?

Answer 10: New filters will arrive with finish coatings using the following materials:
interior = Carboline 300M, 2 coats
exterior = Carboline 60, White, 1 coat
The Manufacturer indicates that an additional finish coat is not required, but the contractor shall provide touch-up painting as needed.

Question 11: Will the flow splitter box be owner furnished? If not, please furnish a detail of the splitter box and the materials of construction. How is splitter box to be supported?

Answer 11: The flow splitter box will be fabricated and supplied by the filter manufacturer (see **Attachment B** for shop drawing). The Contractor is responsible for receiving, storing, installing the flow splitter box, and touch-up painting as needed. The Contractor is also responsible for fabricating, supplying and installing the flow splitter box support frame as shown on the detail sheet, along with all attachments, supports, and ancillary work to provide a complete and fully functional flow splitter box installation. Support frame shall be properly prepped and coated with two coats of Carboline 60 (or approved equal) to match the filters.

Question 12: On drawing C-8 a section B is indicated. Does this section exist?

Answer 12: This section is not available. Please disregard.

Question 13: Will the interior wastewater piping require pipe insulation?

Answer 13: Insulation is not required for interior piping.

Question 14: Could the new filter control panel be installed adjacent to the existing panel? This would enable the operation of the existing filter while the new filter #1 is being installed and started up. How long can the existing filter be taken off-line?

Answer 14: There is not adequate space to install the new filter control panel beside the existing panel. However, the existing filter control panel can be temporarily relocated immediately below its current location (such as sitting on the floor just below where it is located now) which should simplify the relocation requirement (see **Attachment E**).

Operating staff can remove the shelf and filing cabinets to facilitate this temporary relocation. The Contractor is responsible for any wiring/controls modifications to maintain service from the existing filter control panel until the new panel is installed, tested and placed into service. Then, the Contractor shall properly decommission and remove the old filter control panel and make any patching/repairs necessary to result in a neat finished installation.

Question 15: Reference drawing 1 note 4. What will be the cost of the permits to be paid for by the contractor? Could this be an allowance item?

Answer 15: Yes, the Contractor will be responsible for the cost of all permits. The fee for so-called "trade permits" (electrical inspector, plumbing inspector, etc.) shall be included in pay item 1. A new pay item 2 has been added to account specifically for the fee associated with the Fire Safety Permit. A copy of the permit form is attached for reference (see **Attachment F**). This fee will be $8 per $1,000 associated with pay item 1. A new specification section 01150 - Measurement and Payment and Bid Form are attached.

Question 16: Will the shed to be relocated require a foundation or slab?

Answer 16: The shed will be relocated to a temporary location to be identified by the Owner. A foundation will not be required for the shed.

Question 17: Is the Contractor responsible for submitting Operations & Maintenance Manuals for the filters and blowers?

Answer 17: No. The O&M manuals for the filters and the lagoon aeration blowers will be provided to the Owner by the manufacturer.

Question 18: What is the existing media in the existing filter?

Answer 18: The existing media is sand, approximately 24-inches deep.

Question 19: How long can the facility operate without use of the filter?

Answer 19: 72-hours. This duration could be extended but cannot be guaranteed, depending on weather and other factors.

Question 20: Can work hours be extended during the filter shut-down period?

Answer 20: Yes, with proper advanced notice.

Question 21: Who is the electric utility?

Answer 21: Green Mountain Power.

III. Additional Information

1. Existing Filter Room Floor: The floor does not require sealing or painting.

2. Removing the Existing 8-Ft Diameter Filter: Prior to removal, the Owner will dewater the existing filter. Once that is complete, the Contractor is solely responsible for preparing the filter for removal, dismantling and/or disconnecting from existing piping, and removing the filter and all related components from the building, to include proper disposal. This includes, but is not limited to, modifying the filter to enable it to be picked up out of the filter room, welding on "pick points" if necessary, bracing or reinforcing the filter prior to lifting, removing sand or any internal or external components if necessary, addressing any related issues should the filter fall apart during removal, and related efforts.

3. Installation of Loose Parts on New 6-Ft Diameter Filters: The Contractor is responsible for the assembly of loose parts on the two new Single Compartment Monoscour gravity filters. This work includes, but is not limited to, the installation of loose valves (approximately 12 per filter), piping for vent, AWS strainers (approximately 68 per filter), filter sand and anthracite, solenoid valve cabinet, and instrumentation (level switch, pressure gauge, and pressure switch). Refer to Attachment A and "Graver Water Systems, Sugarbush-Filter Replacement Monoscour Filter System (Project No. 112021), Proposal No. 14-005 Rev 8, dated January 26, 2022" document provided in the Special Conditions Attachments for more information.

4. Additional information regarding the lagoon aeration blower packages (**Attachment C**) are attached.

5. A Flow Splitter Box Support exhibit (**Attachment K**) is attached.

6. Potential HVAC subcontractors include:

    a. New England Air Systems
    b. VHV Company
    c. A Cooper Mechanical

7. Potential Electrical subcontractors include:

    a. Gould Corporation
    b. Jourdan's Electrical Contracting
    c. Peak Electric
    d. Local Electric
    e. Norway & Sons
    f. Mike's Electric
    g. CFW Electric

IV. Technical Specifications

1. **REPLACE** Technical Specification 01125 – Owner-Furnished Products with the revised specification (**Attachment G**). Section 1.02.F.10 has been deleted. The Contractor is no longer obligated to provide the labor associated with resolving manufacturer warranty items on the Owner Furnished products.

2. **REPLACE** Technical Specification 01150 – Measurement and Payment with the revised specification (**Attachment H**). Section 3.02 has been added. Bid Item 2 "Application Fee for Division of Fire Safety Construction Permit" has been added.

V. Bid Form

1. **REPLACE** the bid form with the attached bid form, which has been reissued to include the new pay item 2. Only the attached Bid Form with the footer that says **"ADDENDUM NO. 1 5-12-2022 BID FORM"** will be accepted. Bids that utilize any other bid form will be determined non-responsive. See **Attachment I.**

VI. Plans

1. **REPLACE** plan sheet E2 – Electrical Single Line Diagram with the revised plan sheet (**Attachment J**).

VII. Attachments

Attachment A: Pre-Bid Meeting Attendance Log
Attachment B: Draft Additional Filter Information
Attachment C: Additional Blower Information
Attachment D: Existing 8-Ft Diameter Filter Cut Sheet
Attachment E: Existing Filter Control Panel and Relocation Space
Attachment F: Division of Fire Safety Permit Application Form
Attachment G: Revised Specification 01125 – Owner-Furnished Products
Attachment H: Revised Specification 01150 – Measurement and Payment
Attachment I: Addendum No. 15-12-2022 Bid Form
Attachment J: Revised Plan Sheet E2 – Electrical Single Line Diagram
Attachment K: Flow Splitter Box Support Exhibit

This document constitutes Addendum 1 for this project.

Attachment A: Pre-Bid Meeting Attendance Log

PRE-BID MEETING

MOUNTAIN WASTEWATER TREATMENT, INC.
MOUNTAIN WASTEWATER TREATMENT FACILITY TERTIARY FILTER REPLACEMENT
WARREN, VERMONT
224384

APRIL 20, 2022

10:00 AM

ATTENDANCE LOG

(Please Print)

NAME	AFFILIATION & TITLE	PHONE #	E-MAIL ADDRESS
Charles Goodling	DuBois & King, Inc.	(802) 431-1480	cgoodling@dubois-king.com
Jon Ashley	DuBois & King, Inc.	(802) 465-8396 ext. 4810	jashley@dubois-king.com
Gene Martin	Mountain Wastewater Treatment, Inc.	(802) 583-6714	gmartin@sugarbush.com
Dan Young	Penta Corp.	(603) 476-5525	Dan.Young@pentacorp.us
Jerry Tomlinson	Kingsbury Companies LLC	(802) 779-2816	estimating@kingsburyco.com
Jim Maloney	Neagley & Chase	(802) 658-6320	jmaloney@neagleychase.com
Miles Kraus	Naylor & Breen	(802) 558-2266	mkraus@naylorbreen.com

Attachment B: Draft Additional Filter Information

Marmon Industrial Water
A Berkshire Hathaway Company
ECODYNE GRAVER

30 Technology Drive S - Suite 2F
Warren, NJ 07059-5167

(908) 516-1400 PHONE
(908) 516-1401 FAX

http://www.graver.com

TRANSMITTAL SHEET

Date: 04/22/2022

Contact Information: Christopher Groth – Project Manager
christopher.groth@marmonwater.com
(908) 516-1431

Prepared By: C. Groth

To: Alterra Mountain Company
3501 Wazee Street, STE 400
Denver, CO 80216
(802) 583-6714

Groth, Tom K, Joe P, Niraj
Files Saved to J: -Path below

Email To: Gene Martin (SUG) gmartin@sugarbush.com;
Galen Hagen ghagen@dubois-king.com;
Doug Kyser (SUG) dkyser@sugarbush.com;
Jim Westhelle (SUG) jwesthelle@sugarbush.com;
Charles Goodling cgoodling@dubois-king.com;

Project: **Sugarbush Mountain Resort**
Monoscour® Filter System
PO – 30020000821-2

Transmittal No.: 14082-T0002

New Submittal ☒
Resubmittal ☒

Marmon Document No.	Rev	Document Title	Remarks
14082-E-A-1100	A	Specification For Water Treatment System Monoscour® Filters Main Control Panel	For Review & Approval
14082-E-A-6100	A	Specification For Water Treatment System Monoscour® Filters Solenoid Valve Cabinet	For Review & Approval
14082-E-D-1000-01	A	Layout and Details Water Treatment System - Monoscour® Filters Main Control Cabinet Panel Layout	For Review & Approval

Marmon Document No.	Rev	Document Title	Remarks
14082-E-D-2000-01	A	Schematic Wiring Diagram Water Treatment System - Monoscour® Filters Main Control Cabinet Power Distribution	For Review & Approval
14082-E-D-2000-02	A	Schematic Wiring Diagram Water Treatment System - Monoscour® Filters Main Control Cabinet Fixed Digital Inputs	For Review & Approval
14082-E-D-2000-03	A	Schematic Wiring Diagram Water Treatment System - Monoscour® Filters Main Control Cabinet Fixed Digital Inputs	For Review & Approval
14082-E-D-2000-04	A	Schematic Wiring Diagram Water Treatment System - Monoscour® Filters Main Control Cabinet Fixed Digital Inputs 2	For Review & Approval
14082-E-D-5000-01	A	Terminal Block Diagram Water Treatment System - Monoscour® Filters Main Control Cabinet Terminal Blocks	For Review & Approval
14082-E-D-6000-01	A	Layout and Details Water Treatment System - Monoscour® Filters Solenoid Valve Cabinet SVC-A	For Review & Approval
14082-E-D-6000-02	A	Wiring Diagram Water Treatment System - Monoscour® Filters Solenoid Valve Cabinet SVC-A	For Review & Approval
14082-E-D-6001-01	A	Layout and Details Water Treatment System - Monoscour® Filters Solenoid Valve Cabinet SVC-B	For Review & Approval
14082-E-D-6001-02	A	Wiring Diagram Water Treatment System - Monoscour® Filters Solenoid Valve Cabinet SVC-B	For Review & Approval
14082-M-C-2003-001	B	Layout Flow Split Block	For Review & Approval

Marmon Document No.	Rev	Document Title	Remarks
14082-M-D-2000-001	B	Layout Monoscour® Filter - Single Comp 6' DIA x 16' HIGH Filter No. 1	For Review & Approval
14082-M-D-2001-001	B	Layout Monoscour® Filter - Single Comp 6' DIA x 16' HIGH Filter No. 2	For Review & Approval

COMMENTS:

- **Please return documents within 2 weeks to avoid possible schedule delays**
- **Return all documents to Marmon Industrial Water's Document Control at docctrl.miwus@marmonwater.com**

SPECIFICATION

FOR

WATER TREATMENT SYSTEM

MONOSCOUR FILTERS -

MAIN CONTROL PANEL

Sugarbush Mountain Resort **Warren, VT**	Marmon Industrial Water A Berkshire Hathaway Company GRAVER ECODYNE

MIW PROJECT No. 14082	**14082-E-A-1100**	**A**
	Document Number	Revision

REVISION SUMMARY

REVISION	DATE	DESCRIPTION	CHECKED
A	04-19-22	Initial Issue For Client Review	JP

1. SCOPE

1.1. The Control Panel enclosure shall be furnished by Marmon Industrial Water (MIW) complete with sub panel(s) and finished painted ready for final assembly and wiring by the PANEL SHOP, as shown on MIW's Control Panel Layout and Detail drawings.

1.2. MIW shall also furnish all equipment as noted in the "Equipment Identification List" located on the Control Panel Layout and Detail drawing. Additional details for equipment supplied by MIW may be found in the Bill of Material.

1.3. The PANEL SHOP shall provide all necessary cutouts into the control cabinet as required.

1.4. PANEL SHOP shall furnish ALL other items necessary to complete the fabrication in accordance with this specification and all applicable MIW drawings.

1.5. The PANEL SHOP shall complete the final assembly of the Control Panel including mounting of all devices, wiring, and testing in accordance with this specification and all applicable MIW drawings.

2. DEFINITIONS

2.1. The term "PANEL SHOP" shall refer to the Panel Shop where final assembly and wiring of the Control Panel is performed.

2.2. The term "PANEL FABRICATOR" shall refer to the steel shop where the fabrication and painting of the Control Panel is performed.

2.3. The phrase "or approved equal" means alternate equipment or installation method has been approved for use by the MIW Engineer. Approval is obtained only after PANEL SHOP submits specifications or details of alternative design to MIW, in writing, and has been approved, in writing, by the MIW Engineer.

3. CONSTRUCTION DRAWINGS

3.1. The following is a list of drawings and revisions used with this specification for the assembly and wiring of the enclosure:

DOCUMENT NUMBER	REV	TITLE
14082-E-D-1000-01	A	Layout & Details Water Treatment System – Monoscour Filters Main Control Cabinet
14082-E-D-2000-01 thru 4	A	Schematic Wiring Diagram Water Treatment System – Monoscour Filters Main Control Cabinet
14082-E-D-5000-01	A	Terminal Block Diagram Water Treatment System – Monoscour Filters Main Control Cabinet

4. PANEL CONSTRUCTION

4.1. The Control Cabinet Enclosure shall be a standard NEMA 4X, Type 304 Stainless Steel, single door and be per MIW's Cabinet Layout and Detail drawings.

4.2. The Control Cabinet Enclosure manufactured by Saginaw Control and Engineering, or equal.

4.3. Enclosure will be supplied with one (1) subpanel as shown on the MIW Control Cabinet Layout and Detail drawing.

4.4. The PANEL SHOP shall modify the enclosure as necessary, to provide additional features, if any, as shown on the applicable MIW drawings.

4.5. Subpanels as shown on MIW's Main Control Panel Layout and Details drawings are to be considered as a minimum. VENDOR may add subpanel(s) if required to complete the fabrication only after obtaining MIW's written approval.

4.6. All bolts and hardware used in Control Cabinet construction shall be Stainless Steel.

5. PAINTING AND FINISHING

5.1. The external finish shall be the PANEL MANUFACTURER's standard.

5.2. The interior sub-plate color shall the PANEL MANUFACTURER's standard.

6. PANEL ASSEMBLY

6.1. The PANEL SHOP shall modify the enclosure as necessary, to provide additional features, if any, as shown on the applicable MIW drawings.

6.2. All equipment located inside the panel shall be mounted by the PANEL SHOP using sub panels, welded studs, or framework. No screws or hardware shall protrude through any Control Panel exterior surface.

6.3. All bolts and hardware used in Control Panel assembly shall be Stainless Steel.

6.4. The PANEL SHOP shall install MIW supplied Thermal Management unit as shown on the Layout and Details drawings with necessary cutouts as required per manufacturer.

6.5. The PANEL SHOP shall install MIW supplied HMI unit as shown on the Layout and Details drawings with necessary cutouts as required per manufacturer.

7. WIRING AND WIRING METHODS

7.1. The PANEL SHOP shall furnish all wire, wire markers, wire lugs, mounting hardware and mount all equipment in place making all connections tight so they will not loosen from vibration.

7.2. Wire type and size shall be as follows:

7.2.1. All "AC Control Circuit" wires shall be #18 AWG with stranded tinned-copper conductor insulated with moisture and flame-retardant cross-linked polyethylene (XLPE) insulation (Houston type HW05101801 or equal). Wire shall have a rated ampacity of 20 amps at 90 Degrees C. Wire shall meet the VW-1 vertical flame test requirements. Insulation color shall be **GRAY**.

7.2.2. All "DC Control Circuit" wires shall be #18 AWG with stranded tinned-copper conductor insulated with PVC insulation (Belden type 8918 or equal). Wire shall have a rated ampacity of 20 amps at 105 Degrees C. Wire shall meet the VW-1 vertical flame test requirements. Insulation color shall be as follows:

BLUE	All ungrounded DC control circuit, current carrying conductors
BLUE/WHITE	All grounded DC control circuit, current carrying conductors (1NEG24, 2NEG24, etc.).

7.2.3. All "Utility/Power Circuit" wires shall be #14 AWG, single conductor, stranded copper with 600 volt rated type XHHW-2 moisture and flame retardant thermoset Cross-Linked Polyethylene (XLPE) insulation. Wire shall meet the UL Standard UL44 VW-1 vertical flame test requirements. Insulation color shall be as follows:

BLACK	Line conductor
WHITE	Neutral conductor

7.2.4. Ground conductors shall be per latest NEC requirement. All ground conductors shall be insulated, 14 AWG minimum and color-coded GREEN or GREEN with YELLOW stripe.

7.3. All "Instrument Circuits" shall use two twisted shielded conductors in an overall jacket. Twisted conductors shall be minimum #18 AWG stranded bare copper wrapped in aluminum polyester shield tape with tinned drain wire for electrostatic noise rejection. Conductors shall be rated for 300 volts, 105 deg. C with PVC insulation and PVC jacket. Cable shall be Belden Type 1032A or approved equal. Insulation shall be color coded as follows:

BLACK	Positive (POS) conductor
WHITE	Negative (NEG) conductor

7.4. All single conductors shall be identified at both ends with wire markers using the wire numbers shown on MIW Schematic Wiring Diagrams. All instrument cables shall be identified at both ends with wire markers using the cable numbers shown on MIW Schematic Wiring Diagrams. The PANEL SHOP should bring to MIW'S attention for resolution missing or duplicated wire numbers.

7.5. Wire markers shall be fire retardant, tubular type, fitted snugly over wire insulation or heat shrink tubular type marker shrunk snugly over wire insulation. Numerals are to be permanently embossed and be visible when installed.

7.6. All internal wiring shall be installed with a "drop loop" of sufficient slack so that wiring is not strained and so equipment is accessible and/or removable for maintenance.

7.7. All wiring shall be continuous from termination-to-termination point without splices.

7.8. Connections to devices with pigtails shall be made on a tie-point block mounted to the interior of the Control Panel.

7.9. Connections to screw type terminal blocks shall be made by means of pre-insulated ring tongue lugs, pressure-crimped to the conductor and insulation of wire. Lugs must be installed using the appropriate ratchet-type crimper.

7.10. Connections to devices with saddle or box type terminal blocks shall be made by inserting the stripped conductor fully into the connector.

7.11. Connections to devices with push-on type terminals shall be made by means of the appropriate type of pre-insulated push-on lugs pressure-crimped to the conductor and insulation of wire. Lugs must be installed using the appropriate ratchet-type crimper.

7.12. Wires, which are cut or nicked, are NOT acceptable. Wires shall be free from tool marks and abrasions. Minimum bend radius to 1/4" for single conductor wire.

7.13. The shield drain wire, on Instruments Circuits, shall be protected from inadvertent grounding. Where the shield wire is terminated, its drain wire shall be protected by a snug fitting, insulating sleeve. Where the shield wire and negative conductor (NEG) of an Instrument Circuit are not terminated, they shall be cut back and protected using a heat shrink sleeve.

7.14. All panel wiring shall be run in covered wiring duct supplied and installed by the PANEL SHOP. Unless specified as metal duct on MIW'S Control Panel Layout and Detail drawings, all wiring duct shall be made of flame retardant **PVC** and be of the restricted slot design as manufactured by Panduit Corporation, or MIW approved equal.

7.15. PANEL SHOP shall verify that wiring within duct does not exceed 50% fill. The duct sizes shown on MIW'S Control Panel Layout and Detail drawings shall be considered as a minimum by the PANEL SHOP and shall in no way imply deviation from nor relieve PANEL SHOP of this requirement.

7.16. The PANEL SHOP must not use of wire ties within the wiring duct either during fabrication or in the finished panel.

7.17. Upon exiting the wire duct, the final 24 inches of panel wiring may be run exposed to route to equipment. Exposed wiring shall be neatly bundled and adequately supported using clamps and/or cleats, which are plastic or plastic lined. Wiring shall be supported with cable clamps ONLY where wire ducts cannot be installed or as allowed for final runs.

7.18. Instrument Circuit wiring and low-level DC wiring shall be run in bundles and/or ducts completely separate from 120 VAC Control Circuit and Utility Circuit wiring. Where it is necessary for these leads to cross over 120 VAC wiring, they shall cross as near to right angles as possible.

7.19. All internal wiring and terminal block jumpers shall be installed on the "Panel Wiring" side of terminal blocks. Jumper bars shall not be used on any terminal block.

7.20. Hole grommets shall be provided for wiring passing through steel mounting plates.

7.21. All terminal blocks shall be permanently and neatly machine marked, consecutively, as shown on the terminal strip layout drawings. Hand marked terminal blocks are not acceptable.

7.22. No more than two (2) wires shall be terminated on a single terminal. Approximately, twenty percent spare terminal points shall be provided.

7.23. Terminal block "standoffs" shall be supplied by MIW to allow ample clearance for bundling of field cables.

7.24. Cable strap brackets shall be provided by MIW and shall be installed between adjacent rows of terminal blocks on the "Field Wiring" side of the block at approximately 18 inch intervals for tie-wrap support of field cables.

7.25. The PANEL SHOP shall supply a 1" X1/4" copper Equipment Ground Bus the entire length of the panel. This bus shall include a ground terminal at each end suitable for a #1 to #2 AWG conductor (Thomas & Betts No. 32209 or MIW approved equal. The Equipment Ground Bus shall be fabricated in accordance with details provided on MIW's Control Panel Layout and Detail drawing.

7.26. The Equipment Ground Bus shall be securely attached to the Control Panel steel by bolting, brazing or welding. When the Equipment Ground Bus is bolted, all paint shall be removed from the contact area and a coat of "no-oxide" grease shall be applied before bolting.

7.27. The PANEL SHOP shall supply a copper Instrument Ground Pad, the length as required. This bus shall include a ground terminal suitable for a #1 to #2 AWG conductor (Thomas & Betts No. 32207 or MIW approved equal. The Instrument Ground Bus shall be insulated from Control Panel steel and shall be fabricated in accordance with details provided on MIW's Control Panel Layout and Detail drawing.

7.28. The ground bus(es) shall be drilled and tapped for 8-32 NC or 10-24 NC brass screws. They shall have 20% spare capacity and be provided with brass screws.

7.29. All ground connections, whether or not shown on MIW drawings shall be run independently to the appropriate ground bus.

7.30. The PANEL SHOP shall provide a neatly typed directory for the distribution panel in accordance with MIW drawings.

7.31. Power supply fuses, if required, shall be mounted in fuse blocks and located as shown on MIW's Control Panel Layout and Detail drawings. Fuse and fuse blocks shall be supplied by MIW and installed by the PANEL SHOP

7.32. The PANEL SHOP shall provide utility convenience outlet(s), PLC/computer terminal outlets(s), and interior lighting fixture as shown on MIW's Control Panel Layout and Detail drawings.

7.33. Wire runs between interior lights, light switches, convenience outlets, distribution panel and heating circuits (where applicable) shall be enclosed in thin wall conduit or flexible conduit.

7.34. The PANEL SHOP shall mount all PLC equipment and install all modules in accordance the manufacturer's published recommendations.

7.35. If sliding link terminal blocks are specified, they shall be mounted in such a manner that sliding the link down or to the left will close the link.

8. NAMEPLATES

8.1. PANEL SHOP shall furnish and engrave all nameplates in accordance with this specification.

8.2. All nameplates and device identification legend plates shall be fabricated of 1/16-inch thick laminated, rigid phenolic and shall be permanently engraved.

8.3. Nameplates shall be fastened to the exterior of the panel steel by means of Stainless Steel screws.

8.4. Nameplates located within the panel shall be fastened to the interior of the panel steel by means of SCOTCH MOUNT double-sided adhesive vinyl foam tape.

8.5. Nameplates shall have a **WHITE** background and **BLACK** letters.

8.6. Character design shall be plain, block style, sans serif per Namel Standards or equal.

8.7. Device identification legend plates, for example: DISPL-Numbers, AH-Numbers, CO-Numbers, LT-Numbers, PS-Numbers, SW-Numbers, PL-Numbers, PB-Numbers, CR-Numbers and Chassis Numbers shall be engraved with the device number shown on the MIW Control Diagram or Control Panel Layout and Detail drawings. Device identification legend plates shall be fastened to the control panel interior by means of SCOTCH MOUNT double-sided adhesive, vinyl foam tape.

8.8. Nameplates for ISA type Instrument Tag Numbers, field cable terminal blocks and instrument power distribution blocks shall be engraved in accordance with the MIW Panel Layout and Details drawings.

8.9. All nameplates and device identification plates shall be clearly visible and shall NOT be blocked by wire, wireways, or any other components.

8.10. Nameplate and lettering dimensions shall be as follows:

LETTER HEIGHT:	SIZE A:3/16" SIZE B:3/16” SIZE C: 3/8”
LETTER WIDTH:	= 0.6 X HEIGHT
DISTANCE BETWEEN LETTERS:	= 0.125 X HEIGHT
STROKE WIDTH OF LETTERS:	= 0.125”
DISTANCE BETWEEN ROWS	= 0.125”
NAMEPLATE HEIGHT:	SIZE A: 1" SIZE B: 1” SIZE C: 1 1/2”
NAMEPLATE WIDTH:	SIZE A: 3" SIZE B: 5" SIZE C: 10”

NAMEPLATE ENGRAVINGS					
N-No.	**1ST LINE**	**2ND LINE**	**3RD LINE**	**LEGEND PLATE**	**SIZE**
1	Water Treatment System	Monoscour Filters	Main Control Cabinet		C

9. TESTING

9.1. All testing required by this section of the specification shall be performed and CERTIFIED, in writing, by the PANEL SHOP PRIOR to the performance of functional testing by MIW's Engineer.

9.2. PANEL SHOP shall submit such certification to MIW as soon as all PANEL SHOP tests are successfully completed. Such notification signifies that the Control Panel is totally finished and ready to turn over to MIW's Engineer for functional testing. Any re-testing performed by MIW's Engineer due to incompleteness of the Control Panel shall be at the expense of the PANEL SHOP.

9.3. Electrical tests shall demonstrate freedom from unintentional grounds and accuracy of the wiring for all Control Panel mounted devices.

9.4. All tests shall be performed in accordance with the applicable ANSI Standards.

9.5. The following test(s) are required to be performed by the PANEL SHOP:

9.5.1. All wiring shall be given a continuity check to verify agreement with MIW's Schematic Wiring Diagrams.

9.5.2. MIW shall perform a functional test of the Control Panel in the panel shop prior to shipment to verify wiring.

ATTACHMENT 1

ENGRAVING FOR "MIW NAMEPLATE"

SPECIFICATION

FOR

WATER TREATMENT SYSTEM

MONOSCOUR FILTERS –

SOLENOID VALVE CABINETS

Sugarbush Mountain Resort **Warren, VT**	Marmon Industrial Water A Berkshire Hathaway Company GRAVER ECODYNE
MIW PROJECT No. 14082	**14082-E-A-6100** (Document Number) / **A** (Revision)

REVISION SUMMARY

REVISION	DATE	DESCRIPTION	Checked
A	04-19-22	Initial Issue For Client Review	JP

1. SCOPE

1.1. The Solenoid Valve Cabinet enclosure(s) shall be furnished by MIW.

1.2. The VENDOR shall provide all required cutouts in the MIW supplied enclosure(s).

1.3. MIW shall also furnish equipment as noted in the “Supplier” column of the "Equipment Identification List" located on the Cabinet Layout and Detail drawing.

1.4. The VENDOR shall provide ALL other items necessary to complete the fabrication in accordance with this specification and all applicable MIW drawings.

1.5. The VENDOR shall complete the final assembly of the Cabinet including mounting of all devices, wiring, testing and paint touch-up in accordance with this specification and all applicable MIW drawings.

2. DEFINITIONS

2.1. The term "VENDOR" shall refer to the Panel Shop where final assembly and wiring and tubing of the Cabinet are performed.

2.2. The term "PANEL FABRICATOR" shall refer to the steel shop where the fabrication and finishing of the enclosure is performed.

2.3. The phrase "or approved equal" means alternate equipment or installation method has been approved for use by the MIW Engineer. Approval is obtained only after VENDOR submits specifications or details of alternative design to MIW, in writing, and has been approved, in writing, by the MIW Engineer.

3. CABINET CONSTRUCTION

3.1. The Cabinet construction shall be NEMA Type 4X, Type 304 Stainless Steel, single door and be per MIW's Cabinet Layout and Detail drawings.

3.2. The VENDOR shall modify the enclosure as necessary, to provide additional features, if any, as shown on the applicable MIW drawings.

3.3. All equipment located inside the cabinet shall be mounted by the VENDOR using subpanels, welded studs, or framework. No screws or hardware shall protrude through any Cabinet exterior surface.

3.4. Subpanels as shown on MIW's Cabinet Layout and Detail drawings are to be considered as a minimum. VENDOR may add subpanel(s) if required to complete the fabrication only after obtaining MIW's written approval. Subpanels shall be mounted on standoffs and removable. All subpanels with a side longer than 8" shall have a return bend for rigidity.

3.5. All bolts and hardware used in Cabinet construction shall be rust-resistant zinc plated.

4. PAINTING AND FINISHING

4.1. The exterior finish shall be cabinet manufacture’s standard No.4 brushed finish

4.2. The interior finish shall be cabinet manufacture’s standard.

4.3. The equipment mounting plate shall be manufacturer’s standard white finish.

5. WIRING

5.1. The VENDOR shall furnish all wire, wire markers, wire lugs, mounting hardware and mount all equipment in place making all connections tight so they will not loosen from vibration.

5.2. Wire type and size shall be as follows:

5.2.1. All wires and jumpers, except for solenoid valve pigtails, shall be #14 AWG with stranded tinned- copper conductor insulated with PVC insulation (Belden type 8916 or equal). Wire shall have a rated ampacity of 39 amps at 105 Degrees C. Wire shall meet the VW-1 vertical flame test requirements. Insulation color shall be as follows:

BLACK	Line conductor
WHITE	Neutral conductor
GRN/YEL	Ground Conductor
BLUE	DC Positive
BLUE/WHITE	DC Negative

5.2.2. Wires between Solenoid Valve Station and the cabinet terminal blocks shall be #18 AWG with stranded tinned- copper conductor insulated with PVC insulation (Belden type 8918 or equal). Wire shall have a rated ampacity of 20 amps at 105 Degrees C. Wire shall meet the VW-1 vertical flame test requirements. Insulation color shall be as follows:

BLUE	All ungrounded DC control circuit, current carrying conductors
BLUE/WHITE	All grounded DC control circuit, current carrying conductors (1NEG24, 2NEG24, etc.).

5.2.3. Ground conductors shall be per latest NEC requirement.

5.3. All single conductors shall be identified at both ends with wire markers using the wire numbers shown on MIW Schematic Wiring Diagrams. All instrument cables shall be identified at both ends with wire markers using the cable numbers shown on MIW Schematic Wiring Diagrams. The PANEL SHOP should bring to MIW'S attention for resolution missing or duplicated wire numbers.

5.4. Wire markers shall be fire retardant, tubular type, fitted snugly over wire insulation or heat shrink tubular type marker shrunk snugly over wire insulation. Numerals are to be permanently embossed and be visible when installed.

5.5. All internal wiring shall be installed with a "drop loop" of sufficient slack so that wiring is not strained, and so equipment is accessible and/or removable for maintenance.

5.6. All wiring shall be continuous from termination-to-termination point without splices.

5.7. Connections to devices with pigtails shall be made on a tie-point block mounted to the interior of the Control Cabinet.

5.8. Connections to screw type terminal blocks shall be made by means of seamless, pre-insulated ring tongue lugs, pressure-crimped to the conductor and insulation of wire. Lugs must be installed using the appropriate ratchet-type crimper.

5.9. Connections to devices with saddle or box type terminal blocks shall be made by inserting the stripped conductor fully into the connector.

5.10. Connections to devices with push-on type terminals shall be made by means of the appropriate type of seamless pre-insulated push-on lugs pressure-crimped to the conductor and insulation of wire. Lugs must be installed using the appropriate ratchet-type crimper.

5.11. Wires, which are cut or nicked, are NOT acceptable. Wires shall be free from tool marks and abrasions. Minimum bend radius to 1/4” for single conductor wire.

5.12. The shield drain wire, on Instruments Circuits, shall be protected from inadvertent grounding. Where the shield wire is terminated, its drain wire shall be protected by a snug fitting, insulating sleeve. Where the shield wire and negative conductor (NEG) of an Instrument Circuit are not terminated, they shall be cut back and protected using a heat shrink sleeve.

5.13. All panel wiring shall be run in covered wiring duct supplied and installed by the PANEL SHOP. Unless specified as metal duct on MIW’S Control Panel Layout and Detail drawings, all wiring duct shall be made of PVC and be of the restricted slot design as manufactured by Panduit Corporation, or MIW approved equal.

5.14. PANEL SHOP shall verify that wiring within duct does not exceed 50% fill. The duct sizes shown on MIW’S Control Cabinet Layout and Detail drawings shall be considered as a minimum by the PANEL SHOP and shall in no way imply deviation from nor relieve PANEL SHOP of this requirement.

5.15. The PANEL SHOP must not use of wire ties within the wiring duct either during fabrication or in the finished cabinet.

5.16. Upon exiting the wire duct, the final 24 inches of cabinet wiring may be run exposed to route to equipment. Exposed wiring shall be neatly bundled and adequately supported using clamps and/or cleats, which are plastic or plastic lined. Wiring shall be supported with cable clamps ONLY where wire ducts cannot be installed or as allowed for final runs.

5.17. Instrument Circuit wiring and low-level DC wiring shall be run in bundles and/or ducts completely separate from 120 VAC Control Circuit and Utility Circuit wiring. Where it is necessary for these leads to cross over 120 VAC wiring, they shall cross as near to right angles as possible.

5.18. All internal wiring and terminal block jumpers shall be installed on the “Cabinet Wiring” side of terminal blocks. Jumper bars shall not be used on any terminal block.

5.19. Hole grommets shall be provided for wiring passing through steel mounting plates.

5.20. All terminal blocks shall be permanently and neatly machine marked, consecutively, as shown on the terminal strip layout drawings. Hand marked terminal blocks are not acceptable.

5.21. No more than two (2) wires shall be terminated on a single terminal. A minimum of twenty percent spare terminal points shall be provided.

5.22. The PANEL SHOP shall supply an Equipment Ground Bus as shown on MIW’s Layout and Detail drawing. The Equipment Ground Bus shall be 1/4” X 1” copper bar with an adequate number of brass machine screws into drilled and tapped holes.

5.23. The PANEL SHOP shall supply an Equipment Ground Lug as shown on MIW’s Layout and Detail drawing. The Equipment Ground Terminal shall be suitable for a #4 to #1 AWG conductor (Thomas & Betts No. 32207 or MIW approved equal.

5.24. The Equipment Ground Lug shall be securely attached to the Equipment Ground Bus by bolting, brazing or welding. When the Equipment Ground Bus is bolted, all paint shall be removed from the contact area and a “no-oxide” grease shall be applied before bolting.

6. PNEUMATIC PIPING AND TUBING

6.1. The VENDOR shall furnish all pipe, pipe fittings, tube, tube fittings, supports, and any other material required to interconnect the various items shown on MIW's drawings.

6.2. All pneumatic piping components shall be 150-pound, Type 316 stainless steel.

6.3. All tubing connections shall use a suitable Swagelok insert.

6.4. All pneumatic control tubing shall be 3/8" nominal OD X 0.035" wall; ASTM A213 fully annealed seamless type 316 stainless steel.

6.5. All tubing shall be grouped in a neat, logical and orderly manner.

6.6. All tubing bends shall be 90 degrees.

6.7. All pneumatic tubing fittings shall be Swagelok, compression type, brass, as manufactured by Crawford Fitting Co.

6.8. All threaded joints shall be made up with pipe dope such as RECTOR SEAL No. 5 applied sparingly over the male threads. Teflon tape is not acceptable.

7. NAMEPLATES

7.1. VENDOR shall furnish and engrave all nameplates and legend plates in accordance with this specification and the Nameplate Engraving List.

7.2. All nameplates and legend plates shall be fabricated of 1/16-inch thick laminated rigid phenolic and shall be permanently engraved.

7.3. Unless specified otherwise on MIW drawings, nameplates shall have a WHITE BACKGROUND with BLACK LETTERING.

7.4. Nameplates shall be fastened to the exterior of the cabinet steel by means of SCOTCH MOUNT double-sided adhesive vinyl foam tape.

7.5. Nameplates located within the cabinet shall be fastened to the interior of the cabinet steel by means of SCOTCH MOUNT double-sided adhesive vinyl foam tape

7.6. Nameplates shall be located within the cabinet adjacent to their associated device in a consistent manner, preferably above or to the right of the device. Nameplates on the face of the cabinet shall be located as specified on the MIW Cabinet Layout and Detail drawings.

7.7. All nameplates shall be clearly visible and shall NOT be blocked by tubing, wire, wireways or any other components.

7.8. Device identification nameplates, for example: DISPL-Numbers, AH-Numbers, CO-Numbers, LT-Numbers, PS-Numbers, SW-Numbers, PL-Numbers, PB-Numbers, CR-Numbers, and Chassis Numbers shall be engraved in accordance with the device number assignments shown on the applicable MIW Wiring Diagram or Cabinet Layout and Detail drawing.

7.9. Nameplates for ISA type Instrument Tag-Numbers, field cable terminal blocks and instrument power distribution blocks shall be engraved in accordance with the MIW Cabinet Layout and Detail drawings.

7.10. Character design shall be plain, block style, sans serif per Namel Standards, or equal.

7.11. Nameplate and lettering dimensions shall be as follows:

LETTER HEIGHT:	SIZE A:3/16" SIZE B:3/8” SIZE C: 3/8”
LETTER WIDTH:	= 0.6 X HEIGHT
DISTANCE BETWEEN LETTERS:	= 0.125 X HEIGHT
STROKE WIDTH OF LETTERS:	= 0.125 X HEIGHT
NAMEPLATE HEIGHT:	SIZE A: 1" SIZE B: 1 1/2” SIZE C: 1 1/2”
NAMEPLATE WIDTH:	SIZE A: 3" SIZE B: 6" SIZE C: AS REQUIRED

NAMEPLATE ENGRAVINGS

N-No.	1ST LINE	2ND LINE	3RD LINE		SIZE
1	MONOSCOUR FILTER	SOLENOID VALVE CABINET	SVC-A		B
2	Filter A	Service Inlet	Valve XV-001A		A
3	Filter A	Service Outlet	Valve XV-002A		A
4	Filter A	Drain	Valve XV-003A		A
5	Filter A	Air Inlet	Valve XV-004A		A
6	Filter A	Backwash Inlet	Valve XV-005A		A
7	Filter A	Backwash Outlet	Valve XV-006A		A
8	Instrument Air Supply				A
11	MONOSCOUR FILTER	SOLENOID VALVE CABINET	SVC-B		B
12	Filter B	Service Inlet	Valve XV-001B		A
13	Filter B	Service Outlet	Valve XV-002B		A
14	Filter B	Drain	Valve XV-003B		A
15	Filter B	Air Inlet	Valve XV-004B		A
16	Filter B	Backwash Inlet	Valve XV-005B		A
17	Filter B	Backwash Outlet	Valve XV-006B		A

N-No.	1ST LINE	2ND LINE	3RD LINE		SIZE
18	Instrument Air Supply				A

8. TESTING

8.1. All testing required by this section of the specification shall be performed and CERTIFIED, in writing, by the VENDOR PRIOR to the performance of functional testing by MIW's Engineer.

8.2. VENDOR shall submit such certification to MIW as soon as all VENDOR tests are successfully completed. Such notification signifies that the Cabinet is finished and ready to turn over to MIW's Engineer for functional testing. Any re-testing performed by MIW's Engineer due to incompleteness of the Cabinet shall be at the expense of the VENDOR.

8.3. Electrical tests shall demonstrate freedom from unintentional grounds and accuracy of the wiring for all Cabinet mounted devices.

8.4. All tests shall be performed in accordance with the applicable ANSI Standards.

8.5. The following test(s) are required to be performed by the VENDOR:

8.5.1. All wiring shall be given a continuity check to verify agreement with MIW's wiring diagrams

8.5.2. All pneumatic connections shall be tested of leak tight connections.

EQUIPMENT IDENTIFICATION LIST

ITEM	DESCRIPTION	MANUFACTURER	CATALOG NUMBER	SUPPLIER
1	"MIW" Nameplate	MIW	---	MIW
2	Enclosure, NEMA TYPE 4X, 304Stainless Steel (36"Hx30"Wx10"D)	Saginaw or Equal	SCE-36H3010SSLP	MIW
3	Equipment Mounting Plate (33"H x 27"W)	Saginaw or Equal	SCE-36P30	MIW
4				
5				
6	Removable Terminal Block pack, One 6 Pin, One 4 Pin, Screw Type	Allen-Bradley	5069-RTB64-SCREW	MIW
7	Removable Terminal Block, 18 Pins, Screw Type	Allen-Bradley	5069-RTB18-SCREW	MIW
8	Digital Input Module, DC 16-Point, Sinking	Allen-Bradley	5069-IB16	MIW
9	Digital Output Module, DC 16-Point, Sourcing	Allen-Bradley	5069-OB16	MIW
10	PLC, Compactlogix, 2MB, Ethernet I/P	Allen-Bradley	5069-L320ER	MIW
11	Operator Interface, PanelView Plus 7 Standard, 6 in. Display, Touch, 24V DC	Allen-Bradley	2711P-T6C21D8S	MIW
12	Network Switch, Un-Managed 5 Port (4TX-1FX)	N-Tron	305FX-ST	MIW
13	DC Power Supply, 24VDC, 10 AMP	Phoenix Contact	2866763	MIW
14	Circuit Breaker, 1-Pole, DIN, 15A	Allen-Bradley	1492-SPM-1-C-150	MIW
15				
16	Circuit Breaker, 1-Pole, DIN, 3A	Allen-Bradley	1492-SPM-1-C-030	MIW
17	Circuit Breaker, 1-Pole, DIN, 2A	Allen-Bradley	1492-SPM-1-C-020	MIW
18	Relay, Plug-in, 24 VDC, 2 DPDT with Base 700-HN125	Allen-Bradley	700-HS2-Z24	MIW
19	Terminal Blocks, Screw Type, Feed Through WDU 2.5	Weidmuller	1020000000	Panel Shop
20	Terminal Blocks, Screw Type, Fused with 24 VDC LED	Weidmuller	W-Series	Panel Shop
21				
22				
23				
24				
25				
26	GFCI Receptacle, Tamper Resistant, 15A	----------	----------	Panel Shop
27	Two-Hole NEMA Drilled Ground Lug (Suitable For #4 TO #1 AWG)	Thomas & Betts	32207	Panel Shop
28	1" Copper Ground Bus	----------	----------	Panel Shop
29				
30	Din Rail, Symetrical Rail with Standoff	----------	----------	Panel Shop

REVISIONS

REV	DATE	REMARKS	CAD	ENG
A	04-11-22	Initial Issue For Client Review	JP	NP

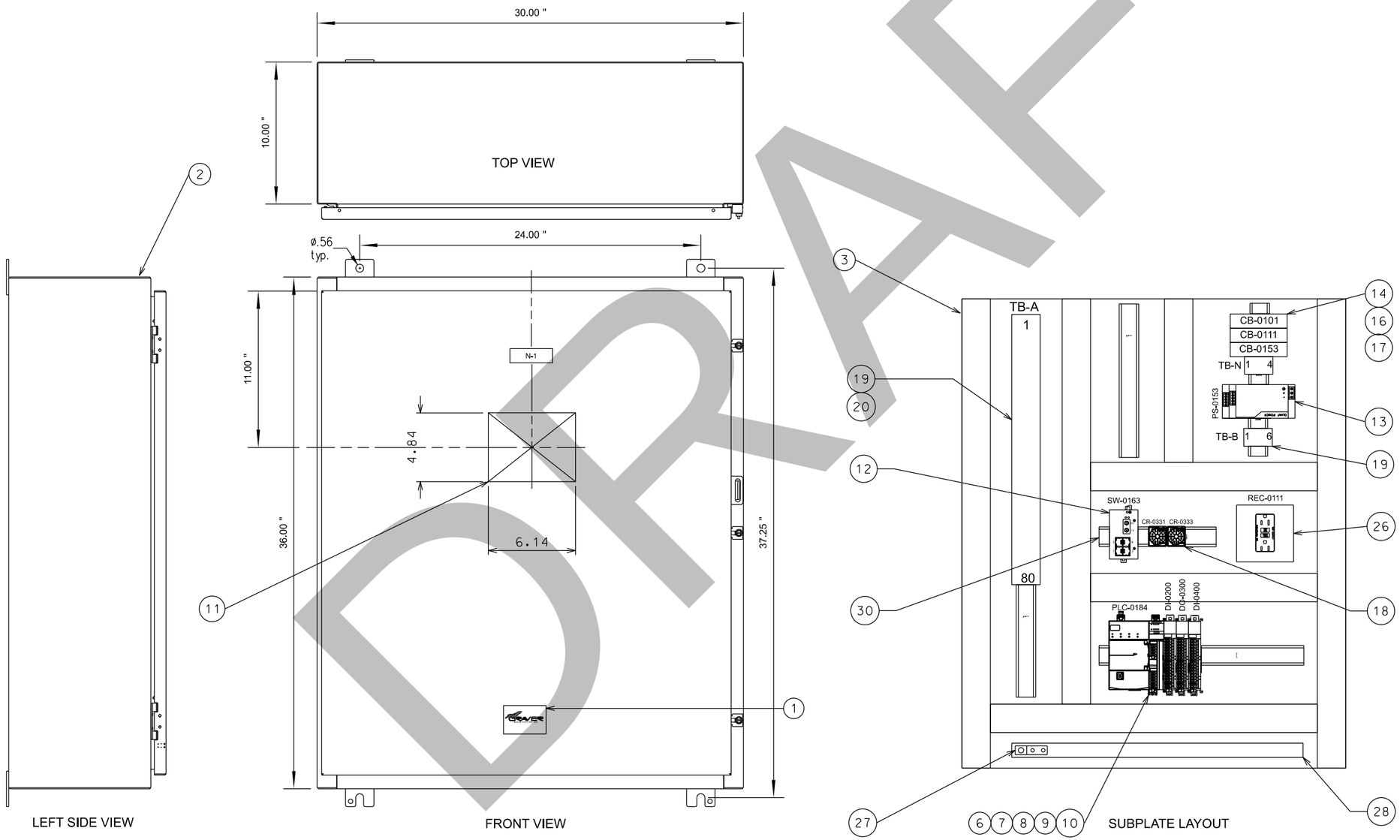

REFERENCE DRAWINGS:
14082-E-A-110 - Control Panel Specification

NAMEPLATE:
N-1 Detail - Size C Per 14082-E-A-1100
Line 1: Water Treatment System
Line 2: Monoscour Filters
Line 3: Main Control Cabinet

Sugarbush Mountain Resort
Warren, VT

MIW PROJECT NO.: 14082

Marmon Industrial Water
A Berkshire Hathaway Company

GRAVER ECODYNE

Layout and Details
Water Treatment System - Monoscour Filters
Main Control Cabinet
Panel Layout

DWG. NO. 14082-E-D-1000-01 REV A

SHEET SIZE - ANSI D

Plotted: 2022-04-15T11:55:16

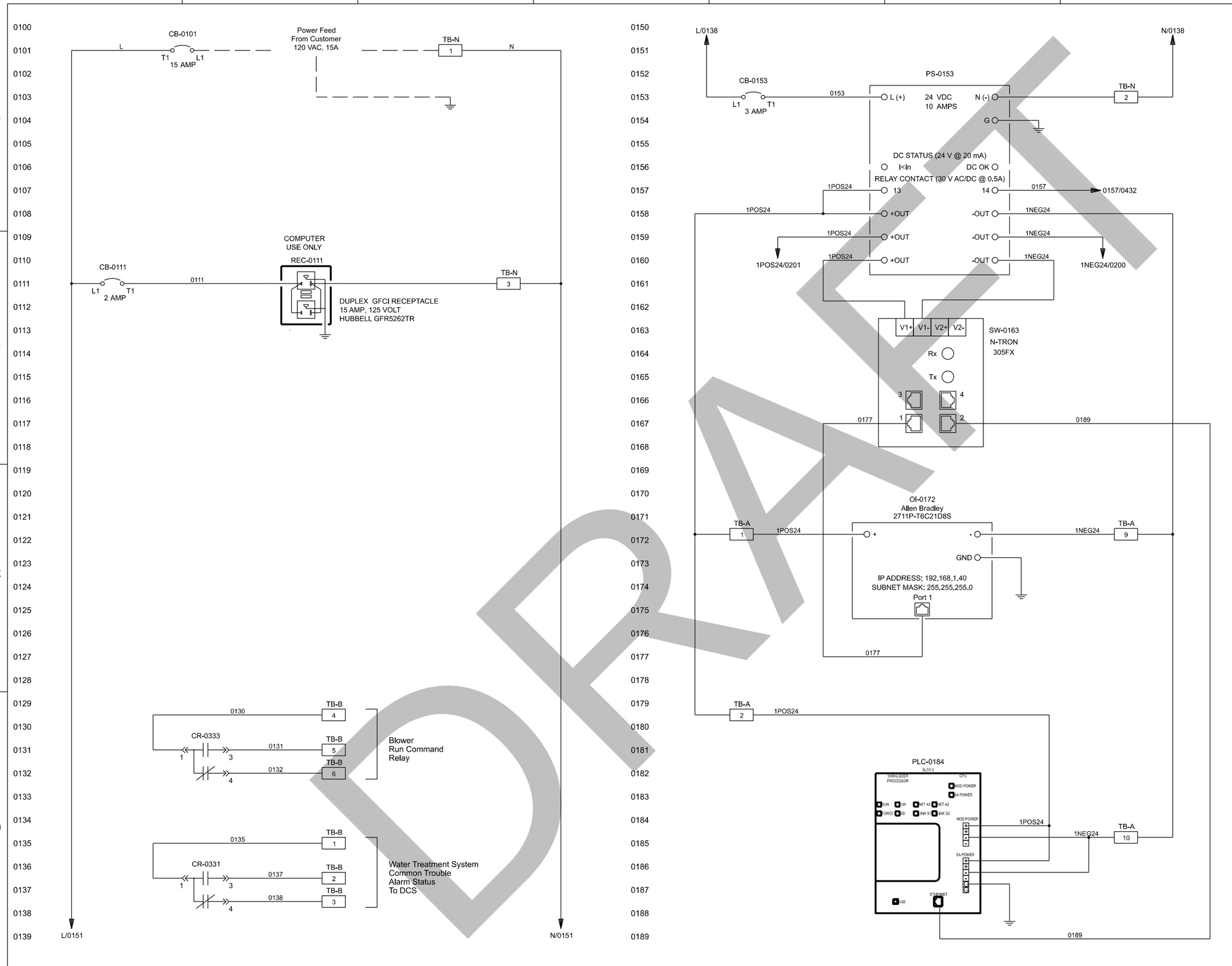

REVISIONS				
REV	DATE	REMARKS	CAD	ENG
A	04-11-22	Initial Issue For Client Review	JP	

WIRING LEGEND

CABINET WIRING
FURNISHED BY PANEL SHOP

SKID ASSEMBLY WIRING
FURNISHED BY ASSEMBLY SHOP

FIELD WIRING
FURNISHED BY OTHERS

Sugarbush Mountain Resort
Warren, VT

MIW PROJECT NO.: 14082

Marmon Industrial Water
A Berkshire Hathaway Company
GRAVER ECODYNE

Schematic Wiring Diagram
Water Treatment System - Monoscour Filters
Main Control Cabinet
Power Distribution

DWG. NO. 14082-E-D-2000-01 REV A

SHEET SIZE - ANSI D

Plotted: 2022-04-15T11:55:14

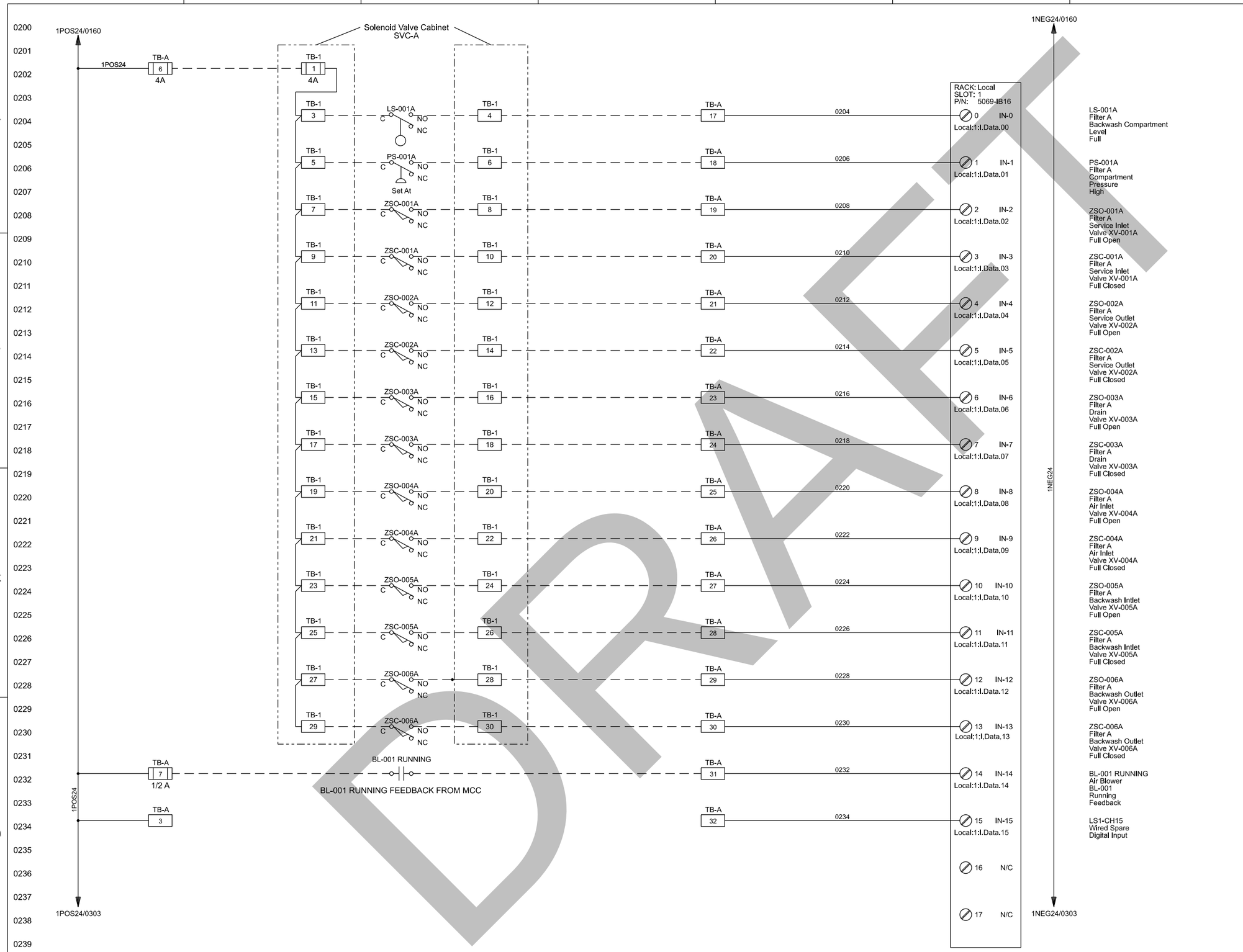

REVISIONS

REV	DATE	REMARKS	CAD	ENG
A	04-11-22	Initial Issue For Client Review	JP	MP

WIRING LEGEND

- CABINET WIRING FURNISHED BY PANEL SHOP
- SKID ASSEMBLY WIRING FURNISHED BY ASSEMBLY SHOP
- FIELD WIRING FURNISHED BY OTHERS

Sugarbush Mountain Resort
Warren, VT

MIW PROJECT NO.: 14082

Marmon Industrial Water
A Berkshire Hathaway Company
GRAVER ECODYNE

Schematic Wiring Diagram
Water Treatment System - Monoscour Filters
Main Control Cabinet
Fixed Digital Inputs

DWG. NO. 14082-E-D-2000-02 REV A

SHEET SIZE - ANSI D

Plotted: 2022-04-15T11:55:12

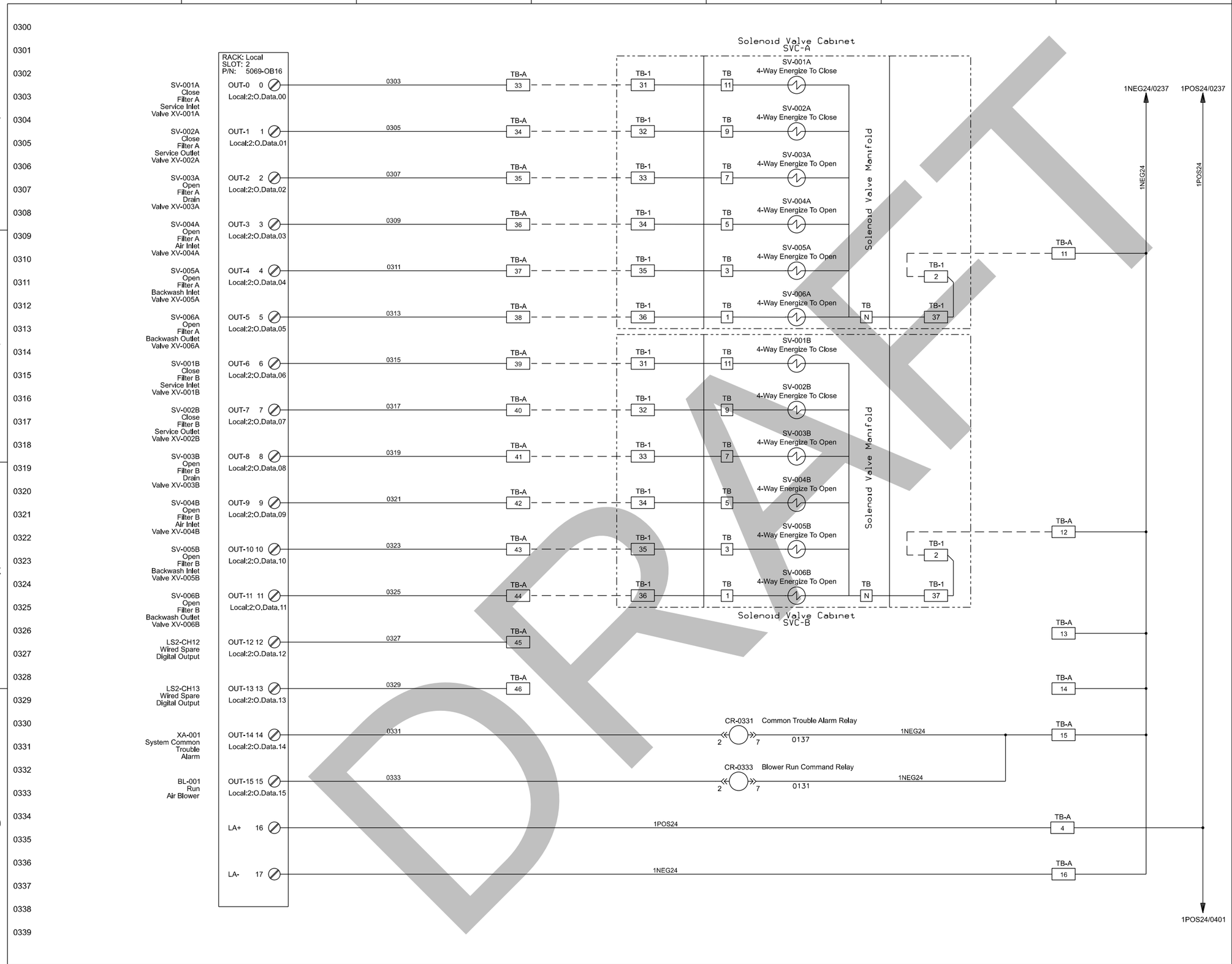

REVISIONS

REV	DATE	REMARKS	CAD	ENG
A	04-11-22	Initial Issue For Client Review	JP	

WIRING LEGEND

- CABINET WIRING FURNISHED BY PANEL SHOP
- SKID ASSEMBLY WIRING FURNISHED BY ASSEMBLY SHOP
- FIELD WIRING FURNISHED BY OTHERS

Sugarbush Mountain Resort
Warren, VT

MIW PROJECT NO.: 14082

Marmon Industrial Water
A Berkshire Hathaway Company

GRAVER ECODYNE

Schematic Wiring Diagram
Water Treatment System - Monoscour Filters
Main Control Cabinet
Fixed Digital Outputs

DWG. NO. 14082-E-D-2000-03 REV A

SHEET SIZE - ANSI D

Plotted: 2022-04-15T11:55:08

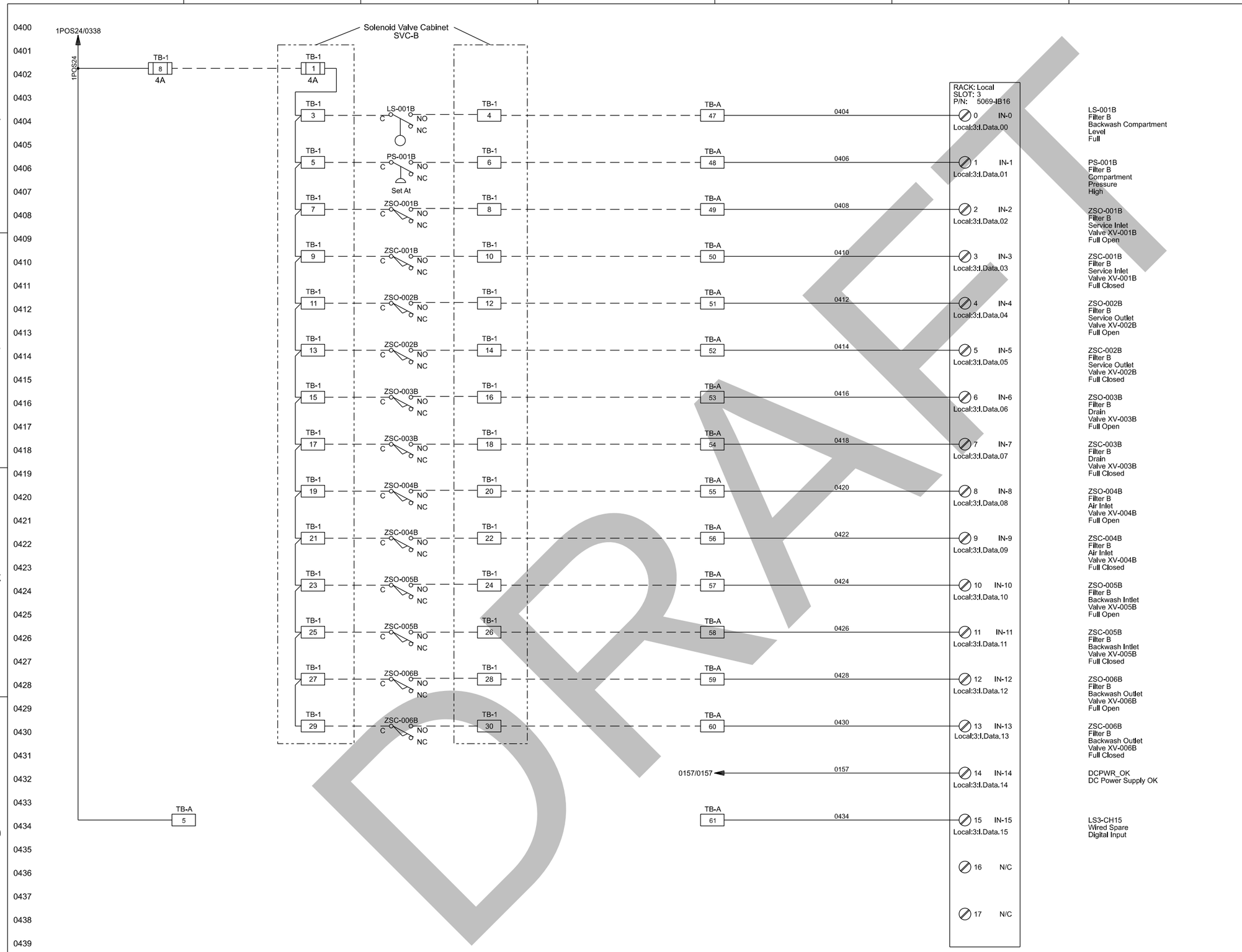

REVISIONS

REV	DATE	REMARKS	CAD	ENG
A	04-11-22	Initial Issue For Client Review	JP	

WIRING LEGEND

- CABINET WIRING FURNISHED BY PANEL SHOP
- SKID ASSEMBLY WIRING FURNISHED BY ASSEMBLY SHOP
- FIELD WIRING FURNISHED BY OTHERS

Sugarbush Mountain Resort
Warren, VT

MIW PROJECT NO.: 14082

Marmon Industrial Water
A Berkshire Hathaway Company
GRAVER ECODYNE

Schematic Wiring Diagram
Water Treatment System - Monoscour Filters
Main Control Cabinet
Fixed Digital Inputs 2

DWG. NO. 14082-E-D-2000-04 REV A

Plotted: 2022-04-15T11:54:58

SHEET SIZE - ANSI D

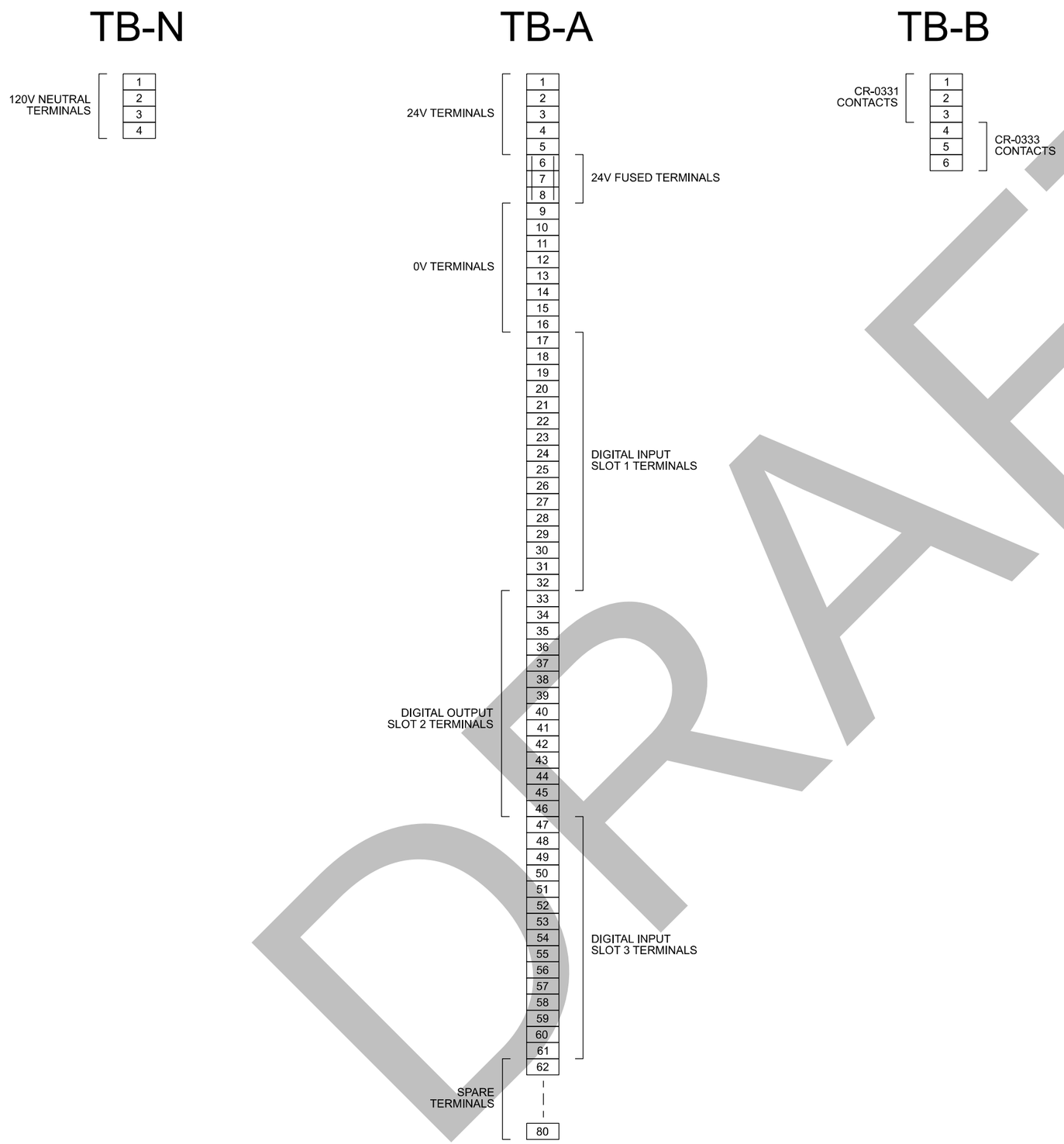

REVISIONS

REV	DATE	REMARKS	CAD	ENG
A	04-11-22	Initial Issue For Client Review	JP	

WIRING LEGEND

CABINET WIRING
FURNISHED BY PANEL SHOP

SKID ASSEMBLY WIRING
FURNISHED BY ASSEMBLY SHOP

FIELD WIRING
FURNISHED BY OTHERS

Sugarbush Mountain Resort
Warren, VT

MIW PROJECT NO.: 14082

Marmon Industrial Water
A Berkshire Hathaway Company

GRAVER ECODYNE

Terminal Block Diagram
Water Treatment System - Monoscour Filters
Main Control Cabinet
Terminal Blocks

DWG. NO. 14082-E-D-5000-01 REV A

SHEET SIZE - ANSI D

Plotted: 2022-04-15T11:54:26

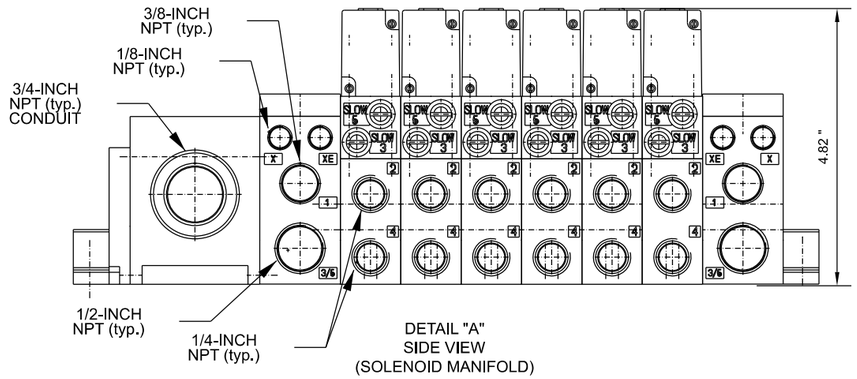

DETAIL "A"
SIDE VIEW
(SOLENOID MANIFOLD)

EQUIPMENT IDENTIFICATION LIST

ITEM	DESCRIPTION	MANUFACTURER	CATALOG NUMBER	SUPPLIER
1	"MIW" Nameplate	MIW	A-9653	MIW
2	Enclosure, NEMA Type 4X, 304 SS (24"H x 24"W x 12"D)	Saginaw	SCE-24H2412SSLP	MIW
3	Equipment Mounting Plate (21"H x 21"W)	Saginaw	SCE-24P24	MIW
4	Solenoid Valve Manifold - Six Stations (24 VDC, 4-Way Single Coil)	Emerson/Aventics	AV12AF000112437	MIW
5	Hex Head Pipe Plug, 3/8" NPT, Type 316 SS	McMaster-Carr	4452K543	Panel Shop
5	Air Filter Regulator with Gauge, 3/8-Inch Ports	Emerson/Aventics	8552APBP3R119GN	MIW
7	Tubing, 3/8", Type 316 SS, 0.035"	---	---	Panel Shop
8	Terminal Block, Type Feed Thru, WDU 2.5	Weidmuller	1020000000	Panel Shop
9	DIN Rail Standoff, 38mm, Symetrical Rail	Allen Bradley	1492-DR6	Panel Shop
10	Ground Lug, Two-Hole NEMA Drilled (Suitable For #4 TO #1 AWG)	Thomas & Betts	32207	Panel Shop
11	Wireway, Plastic	---	---	Panel Shop
12	1-Inch Copper Ground Bus	---	---	Panel Shop
13				
14	Nipple, Electrical 3/4"	---	---	Panel Shop
15	Pull Elbow, 3/4" SS	---	---	Panel Shop
16	Locking Nut, 3/4"	---	---	Panel Shop
17	O-Ring, 3/4"	---	---	Panel Shop
18	Grommet, 3/4", Plastic	---	---	Panel Shop
19				
20	Terminal Block, Screw Type, Fused with 24 VDC LED	Weidmuller	W-Series	Panel Shop
21				
22	Male Connector, 3/8" MNPT x 3/8" Tube SS	---	---	Panel Shop
23				
24				
25				

REVISIONS

REV	DATE	REMARKS	CAD	ENG
A	04-11-22	Initial Issue For Client Review	JP	

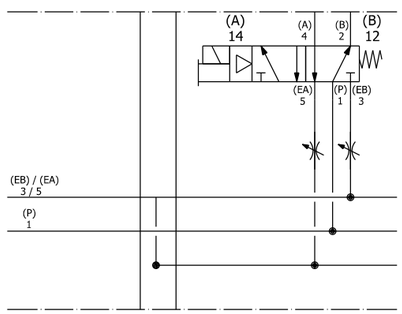

SOLENOID SCHEMATIC
(TYPICAL)

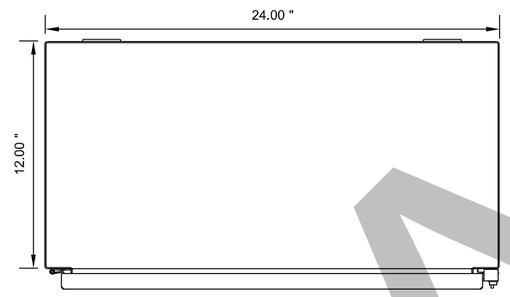

TOP VIEW

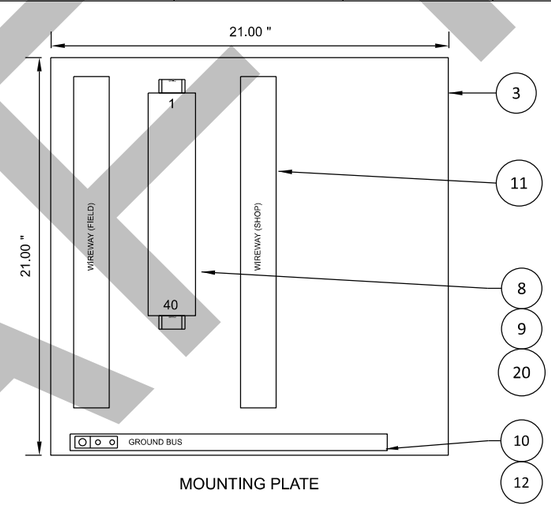

MOUNTING PLATE

TUBING LEGEND

TUBING
(FURNISHED BY PANEL SHOP)

FIELD TUBING
(FURNISHED BY OTHERS)

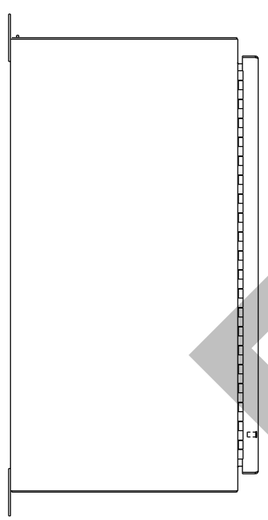

LEFT SIDE VIEW

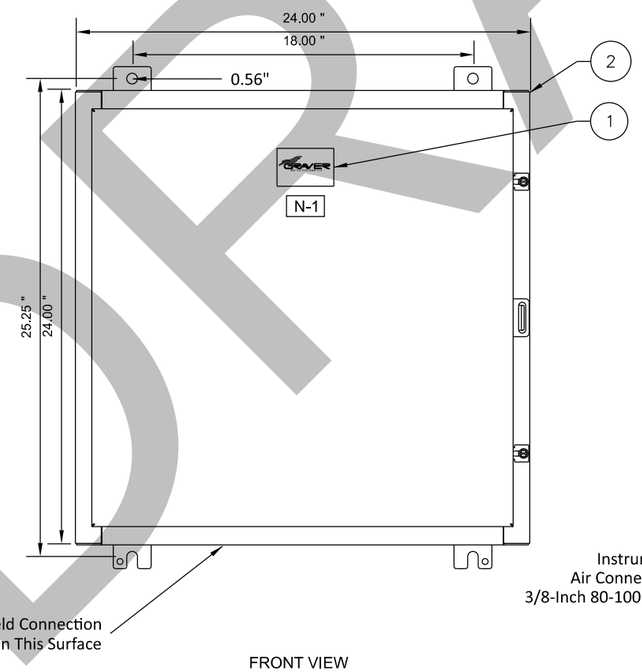

FRONT VIEW

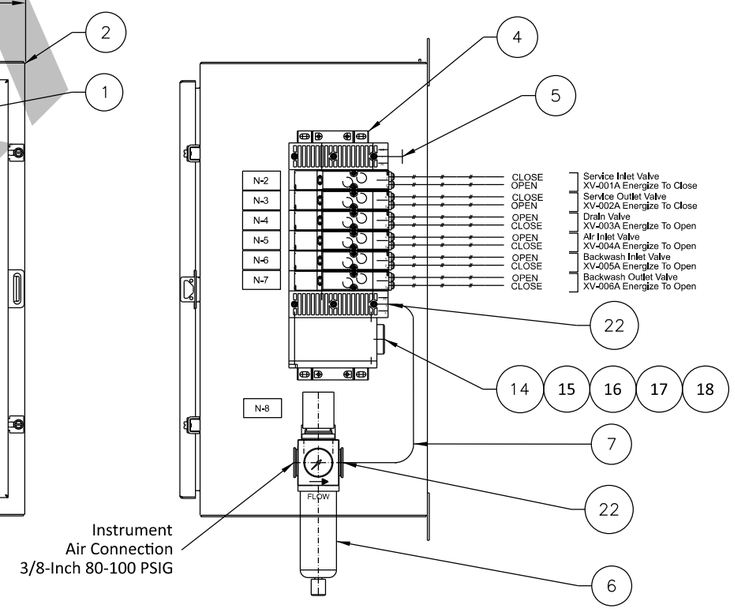

RIGHT SIDE VIEW

REFERENCE DRAWINGS

14082-E-A-6100 SPECIFICATION AND NAMEPLATE ENGRAVINGS SOLENOID VALVE CABINET

Sugarbush Mountain Resort
Warren, VT

MIW PROJECT NO.: 14082

Marmon Industrial Water
A Berkshire Hathaway Company

GRAVER ECODYNE

Layout And Details
Water Treatment System - Monoscour Filters
Solenoid Valve Cabinet
SVC-A

DWG. NO. 14082-E-D-6000-01 REV A

SHEET SIZE - ANSI D

Plotted: 2022-04-15T11:54:52

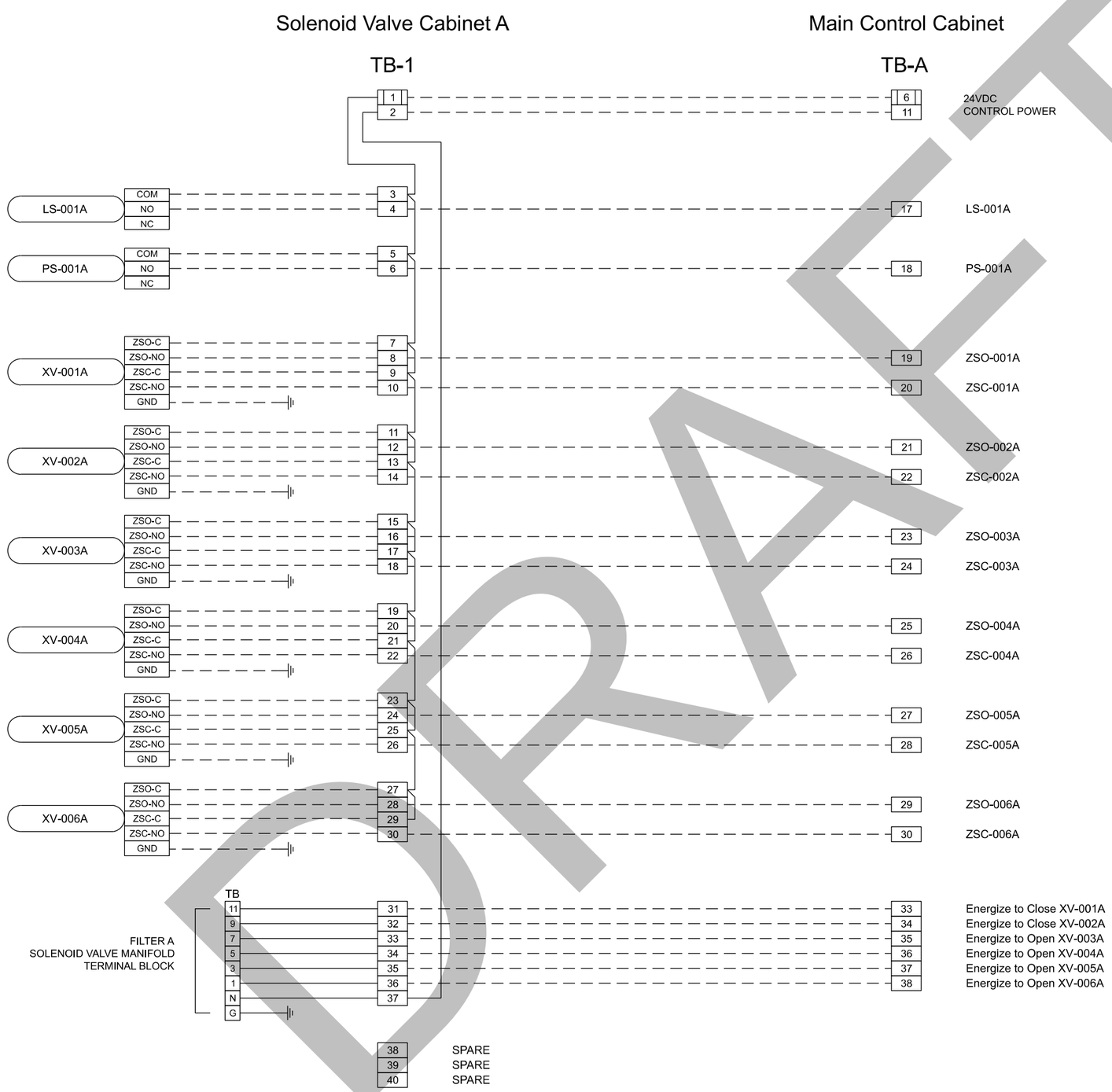

REVISIONS

REV	DATE	REMARKS	CAD	ENG
A	04-11-22	Initial Issue For Client Review	JP	

WIRING LEGEND

CABINET WIRING
FURNISHED BY PANEL SHOP

SKID ASSEMBLY WIRING
FURNISHED BY ASSEMBLY SHOP

FIELD WIRING
FURNISHED BY OTHERS

Sugarbush Mountain Resort
Warren, VT

MIW PROJECT NO.: 14082

Marmon Industrial Water
A Berkshire Hathaway Company

GRAVER ECODYNE

Wiring Diagram
Water Treatment System - Monoscour Filters
Solenoid Valve Cabinet
SVC-A

DWG. NO. 14082-E-D-6000-02
REV A

SHEET SIZE - ANSI D

Plotted: 2022-04-15T11:54:47

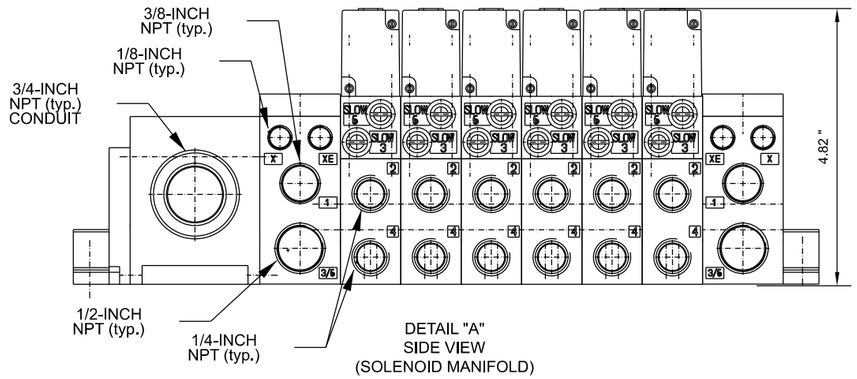

DETAIL "A"
SIDE VIEW
(SOLENOID MANIFOLD)

EQUIPMENT IDENTIFICATION LIST

ITEM	DESCRIPTION	MANUFACTURER	CATALOG NUMBER	SUPPLIER
1	"MIW" Nameplate	MIW	A-9653	MIW
2	Enclosure, NEMA Type 4X, 304 SS (24"H x 24"W x 12"D)	Saginaw	SCE-24H2412SSLP	MIW
3	Equipment Mounting Plate (21"H x 21"W)	Saginaw	SCE-24P24	MIW
4	Solenoid Valve Manifold - Six Stations (24 VDC, 4-Way Single Coil)	Emerson/Aventics	AV12AF000112437	MIW
5	Hex Head Pipe Plug, 3/8" NPT, Type 316 SS	McMaster-Carr	4452K543	Panel Shop
5	Air Filter Regulator with Gauge, 3/8-Inch Ports	Emerson/Aventics	8552APBP3R119GN	MIW
7	Tubing, 3/8", Type 316 SS, 0.035"	---	---	Panel Shop
8	Terminal Block, Type Feed Thru, WDU 2.5	Weidmuller	1020000000	Panel Shop
9	DIN Rail Standoff, 38mm, Symetrical Rail	Allen Bradley	1492-DR6	Panel Shop
10	Ground Lug, Two-Hole NEMA Drilled (Suitable For #4 TO #1 AWG)	Thomas & Betts	32207	Panel Shop
11	Wireway, Plastic	---	---	Panel Shop
12	1-Inch Copper Ground Bus	---	---	Panel Shop
13				
14	Nipple, Electrical 3/4"	---	---	Panel Shop
15	Pull Elbow, 3/4" SS	---	---	Panel Shop
16	Locking Nut, 3/4"	---	---	Panel Shop
17	O-Ring, 3/4"	---	---	Panel Shop
18	Grommet, 3/4", Plastic	---	---	Panel Shop
19				
20	Terminal Block, Screw Type, Fused with 24 VDC LED	Weidmuller	W-Series	Panel Shop
21				
22	Male Connector, 3/8" MNPT x 3/8" Tube SS	---	---	Panel Shop
23				
24				
25				

REVISIONS

REV	DATE	REMARKS	CAD	ENG
A	04-11-22	Initial Issue For Client Review	JP	

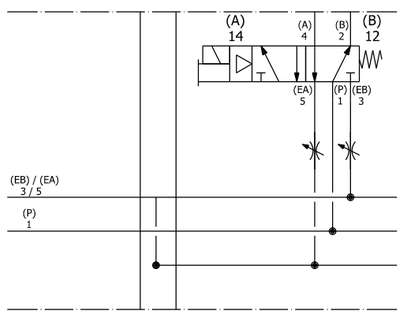

SOLENOID SCHEMATIC
(TYPICAL)

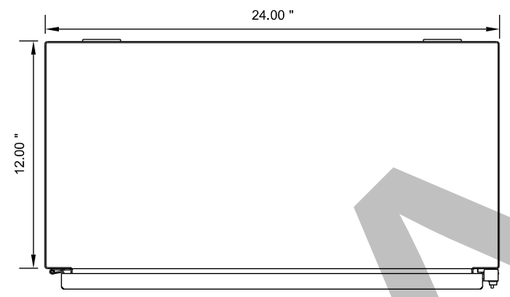

TOP VIEW

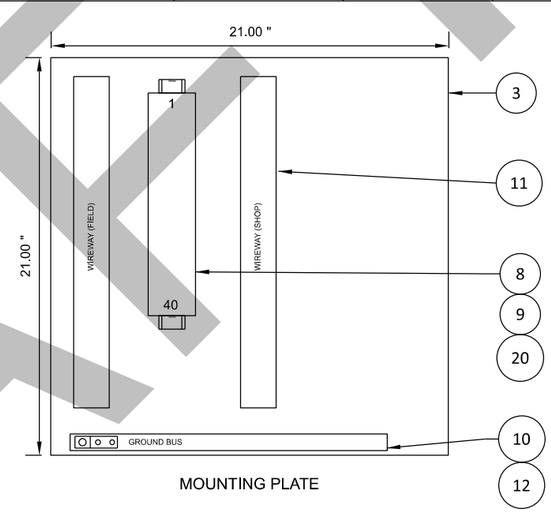

MOUNTING PLATE

TUBING LEGEND

TUBING
(FURNISHED BY PANEL SHOP)

FIELD TUBING
(FURNISHED BY OTHERS)

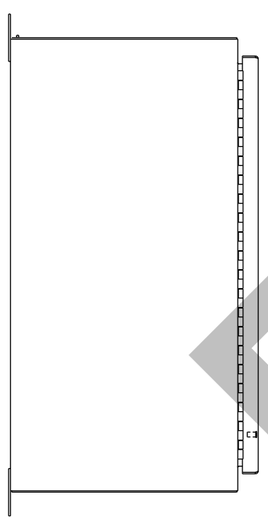

LEFT SIDE VIEW

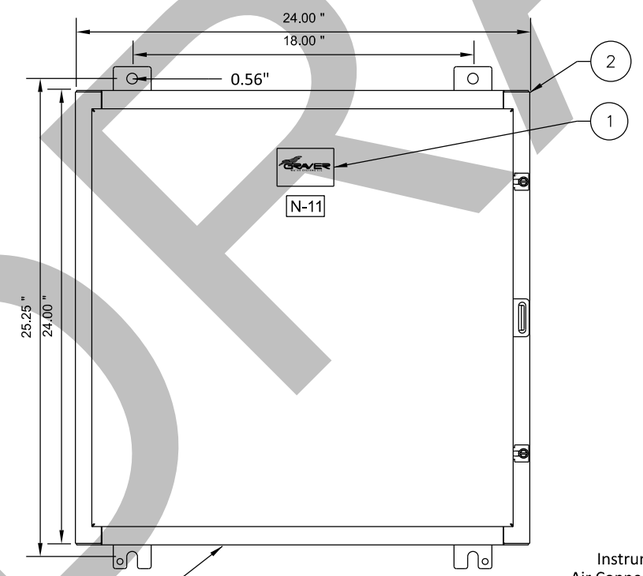

FRONT VIEW

Field Connection
On This Surface

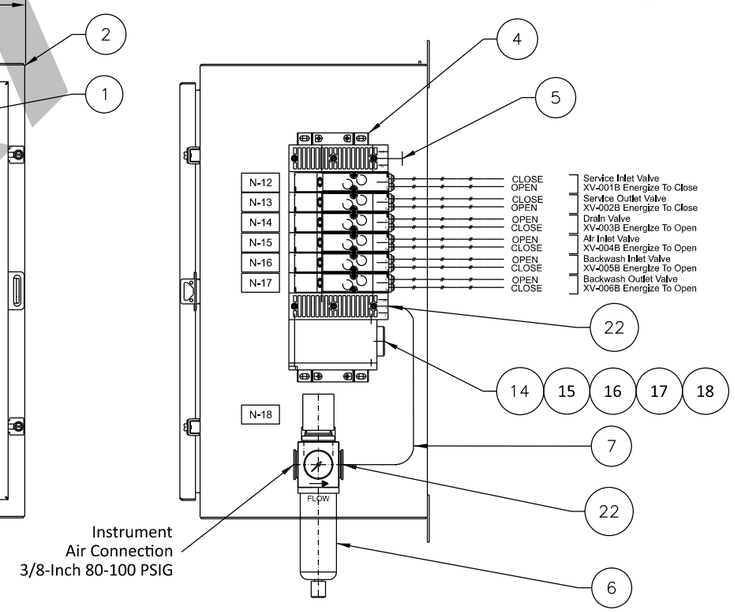

Instrument
Air Connection
3/8-Inch 80-100 PSIG

RIGHT SIDE VIEW

REFERENCE DRAWINGS

14082-E-A-6100 SPECIFICATION AND NAMEPLATE ENGRAVINGS
SOLENOID VALVE CABINET

Sugarbush Mountain Resort
Warren, VT

MIW PROJECT NO.: 14082

Marmon Industrial Water
A Berkshire Hathaway Company

GRAVER ECODYNE

Layout And Details
Water Treatment System - Monoscour Filters
Solenoid Valve Cabinet
SVC-B

DWG. NO. 14082-E-D-6001-01 REV A

SHEET SIZE - ANSI D

Plotted: 2022-04-15T11:54:44

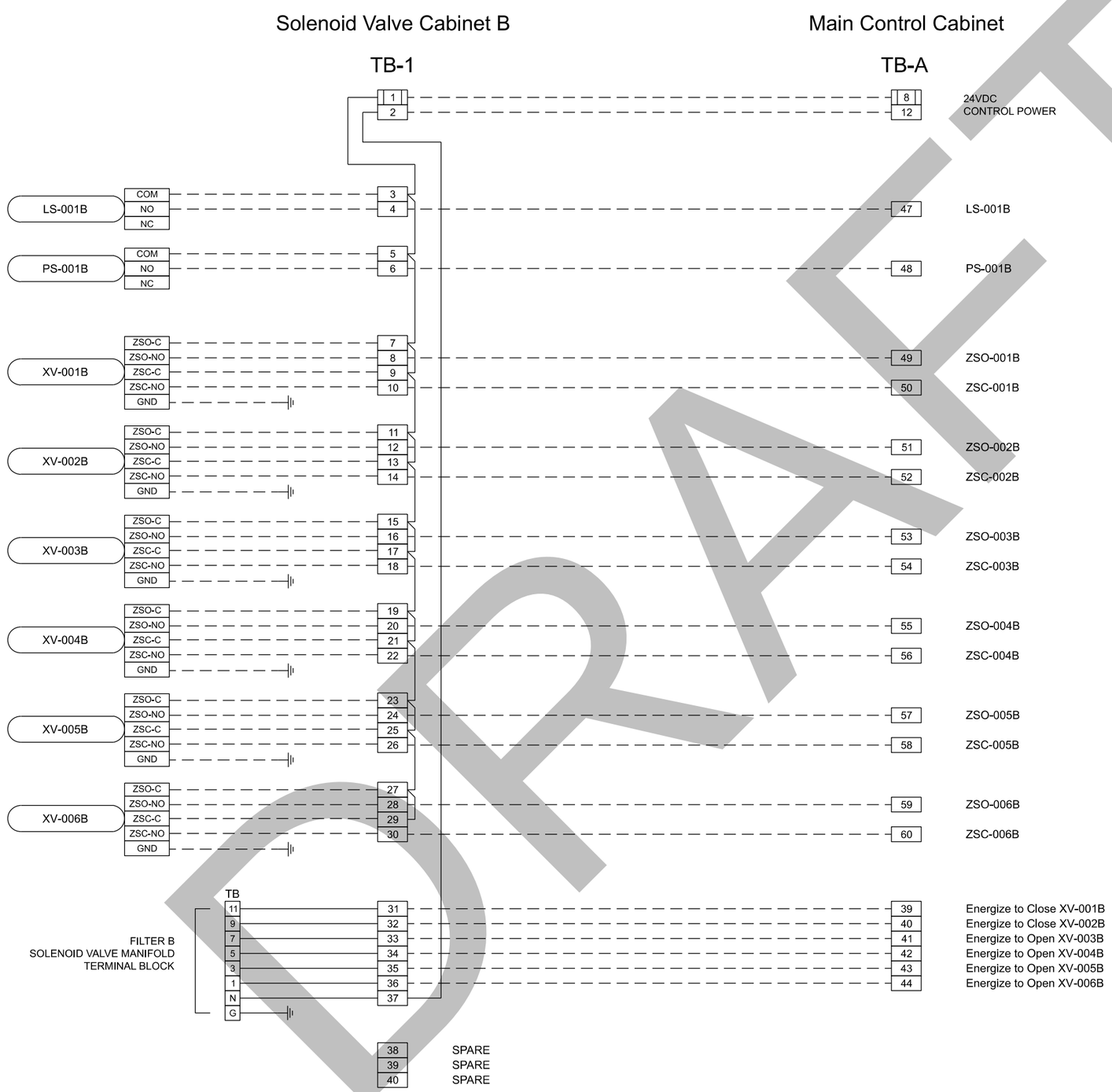

REVISIONS

REV	DATE	REMARKS	CAD	ENG
A	04-11-22	Initial Issue For Client Review	JP	NP

WIRING LEGEND

CABINET WIRING
FURNISHED BY PANEL SHOP

SKID ASSEMBLY WIRING
FURNISHED BY ASSEMBLY SHOP

FIELD WIRING
FURNISHED BY OTHERS

Sugarbush Mountain Resort
Warren, VT

MIW PROJECT NO.: 14082

Marmon Industrial Water
A Berkshire Hathaway Company

GRAVER ECODYNE

Wiring Diagram

Water Treatment System - Monoscour Filters
Solenoid Valve Cabinet
SVC-B

DWG. NO. 14082-E-D-6001-02 REV A

SHEET SIZE - ANSI D

Plotted: 2022-04-15T11:54:41

REVISIONS				
REV.	DATE	DESCRIPTION	DRAWN BY	CHECKED BY
A	4/11/2022	INITIAL ISSUE	TK	MS
B	4/19/2022	GEOMETRY UPDATE	TK	MS

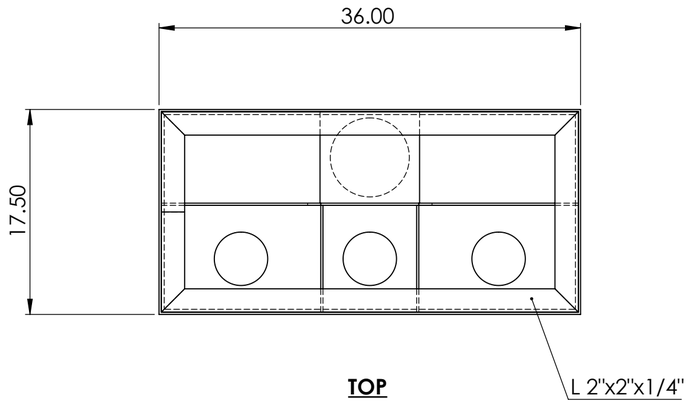

TOP

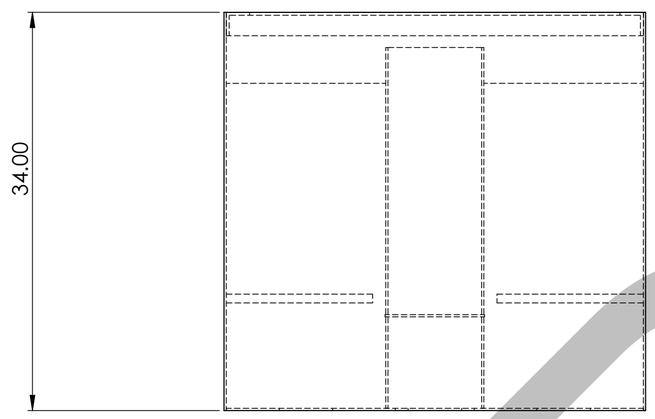

FRONT

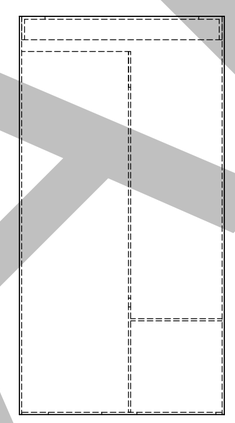

RIGHT

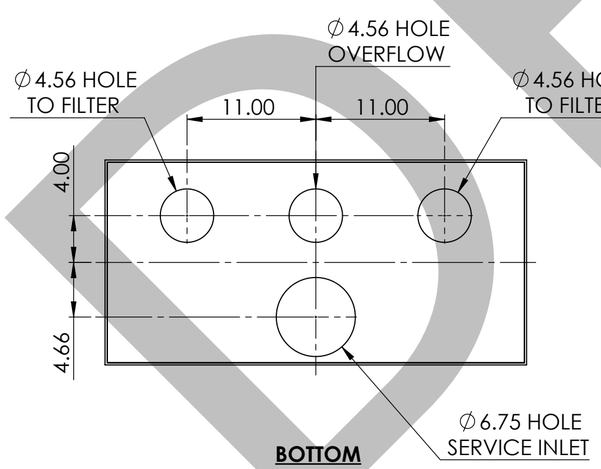

BOTTOM

NOTES:

SHIPPING WT. .....335 LBS.
FLOODED WT. .....1080 LBS.
DESIGN FLOW.....142 GPM

1. PURCHASER IS RESPONSIBLE FOR FOUNDATION AND SUPPORT DESIGN PER DESIGN DATA GIVEN. PURCHASER SUPPLIES LABOR AND MATERIAL FOR FOUNDATION, SUPPORTS, ANCHORAGE AND INTERCONNECTING PIPING. SUMP AND DRAIN TO BE OF AMPLE SIZE TO CARRY FLOW LISTED.

2. SHOP PAINTING/CLEANING:

   INTERIOR PAINT:
   PAINT: .....CARBOLINE 300M
   2 COATS

   EXTERIOR PAINT:
   PAINT: .....CARBOLINE 60
   FINISH COLOR: .....WHITE
   1 COAT

UNLESS OTHERWISE SPECIFIED:

DIMENSIONS ARE IN INCHES
TOLERANCES (UNLESS OTHERWISE SPECIFIED:

FRACTIONAL ± 1/8"
ANGULAR: ± 0.5°
TWO PLACE DECIMAL ± 0.030"
THREE PLACE DECIMAL ± 0.005"

DO NOT SCALE DRAWING
SCALE: 1:20
MATERIAL

3RD ANGLE PROJECTION

	NAME	DATE
DRAWN	TK	4/1/2022
CHECKED	MS	4/11/2022
APPROVED	SBP	4/11/2022

PROJECT: MONOSCOUR FILTER REPLACEMENT
CLIENT: SUGARBUSH MOUNTAIN RESORT
ENGINEER:
LOCATION: WARREN, VT

Marmon Industrial Water
A Berkshire Hathaway Company
ECODYNE GRAVER

TITLE: LAYOUT
FLOW SPLIT BOX

SIZE	DWG. NO.	REV
C	14082-M-C-2003-001	B

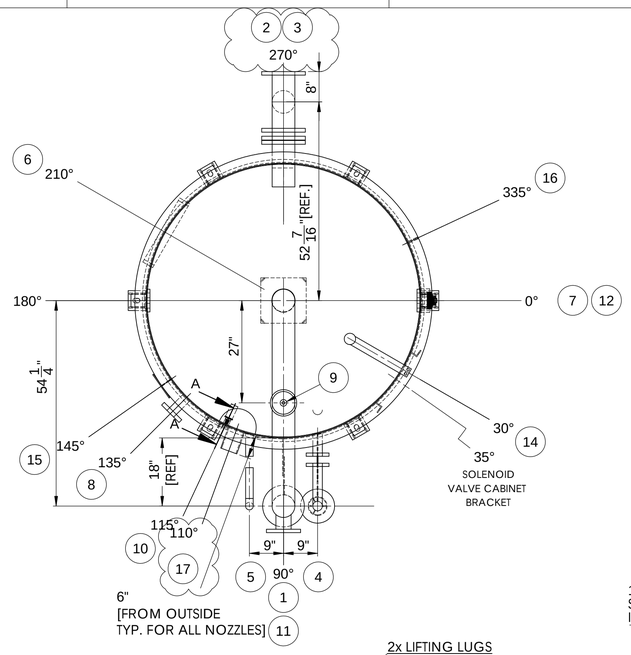

PLAN
SCALE 1 : 20

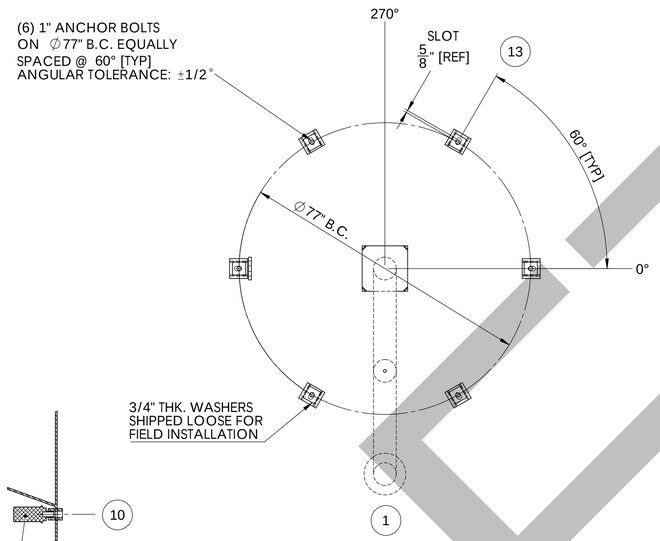

ANCHOR BOLT LOCATION

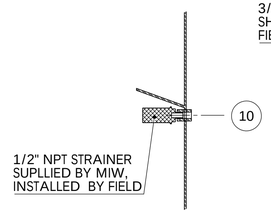

SECTION A-A
PRESSURE SWITCH
STRAINER INSTALLATION

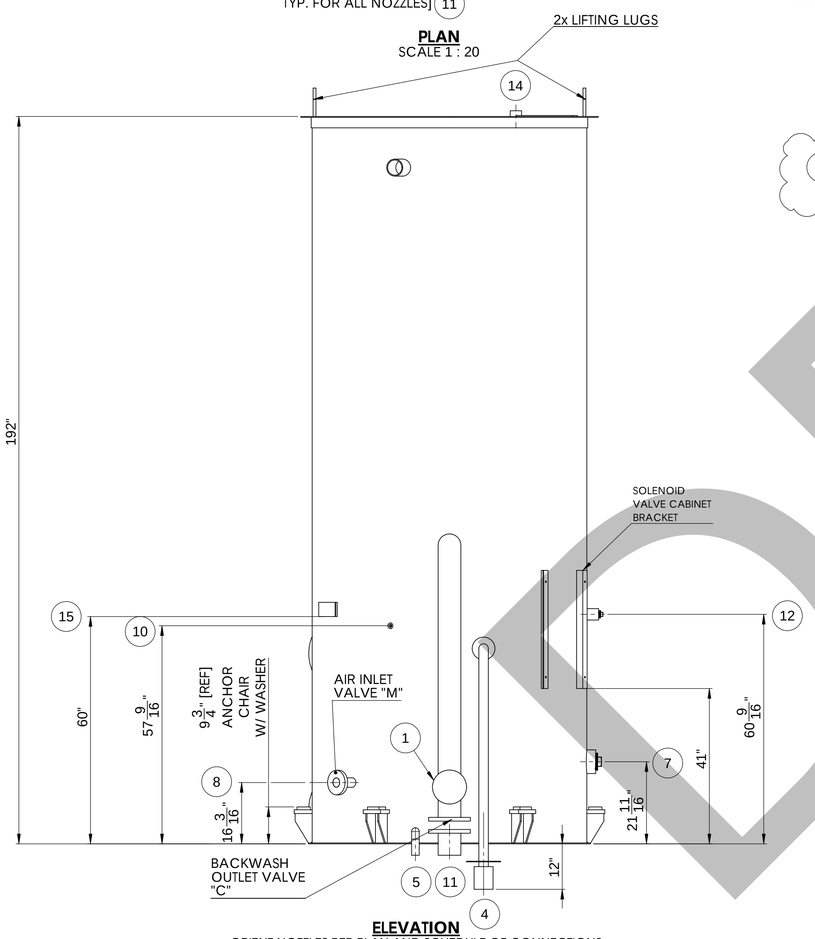

ELEVATION
ORIENT NOZZLES PER PLAN AND SCHEDULE OF CONNECTIONS
SCALE 1 : 20

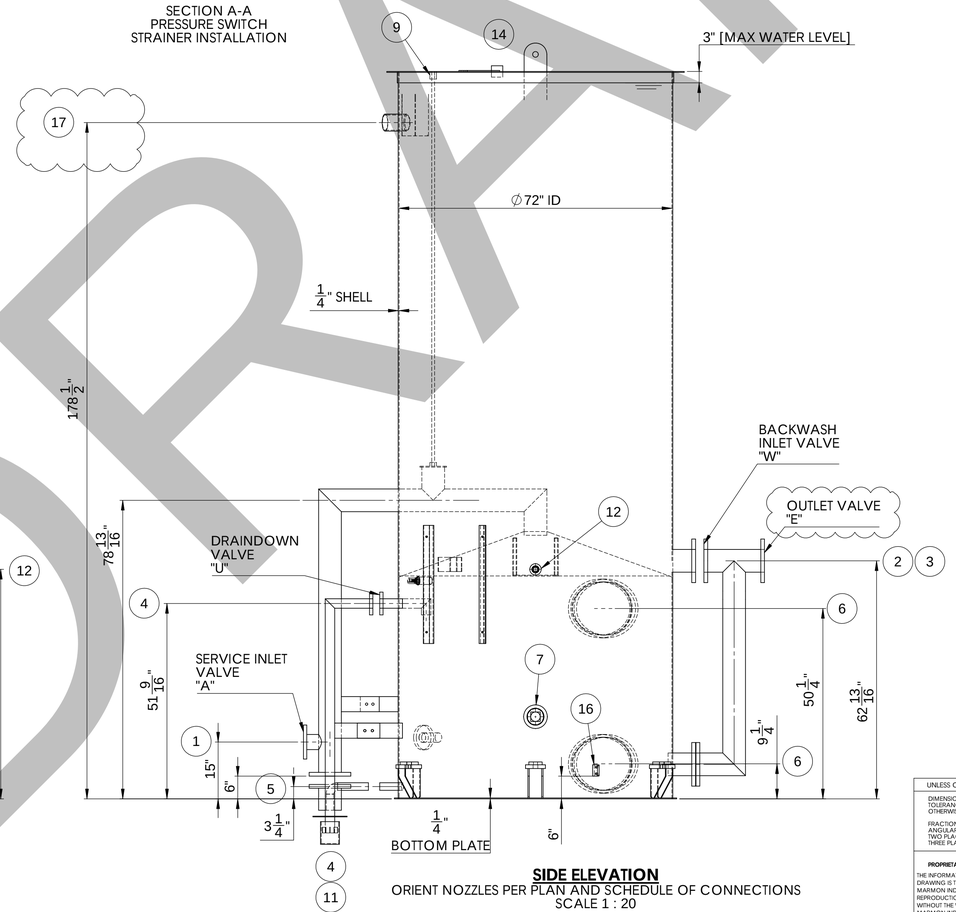

SIDE ELEVATION
ORIENT NOZZLES PER PLAN AND SCHEDULE OF CONNECTIONS
SCALE 1 : 20

REVISIONS				
REV.	DATE	DESCRIPTION	DRAWN BY	CHECKED BY
A	3/22/2022	INITIAL ISSUE	TK	MS
B	4/19/2022	NOZZLE ROTATION PER CLIENT COMMENTS AND VALVE SIZE CORRECTIONS	TK	MS

SCHEDULE OF CONNECTIONS AND OPENINGS

ITEM	ORIENT. DEG.	QTY.	SIZE	TYPE CONN.	DESCRIPTION	MATERIAL
1	90°	1	∅4"	FLG'D	INLET	CS
2	270°	1	∅6"	FLG'D	OUTLET	CS
3	270°	1	∅6"	-	BACKWASH INLET	CS
4	-	1	∅2 1/2"	-	DRAINDOWN	CS
5	-	1	∅2"	THD	DRAIN	CS
6	210°	2	14"x18" ellip.	-	MANHOLE	CS
7	0°	1	∅4"	THD	MEDIA DRAIN (W/PLUG)	CS
8	135°	1	∅2 1/2"	FLG'D	AIR INLET	CS
9	90°	1	∅3/4"	THD	VENT	CS
10	115°	1	∅1/2"	THD	PRESSURE SWITCH	CS
11	90°	1	∅6"	-	BACKWASH OUTLET	CS
12	0°	1	∅1 1/2"	THD	STORAGE COMPARTMENT DRAIN (w/PLUG)	CS
13	-	6	-	-	ANCHOR CHAIRS	CS
14	30°	1	-	-	INTERLOCK LEVEL SWITCH	CS
15	145°	1	-	-	MIW NAMEPLATE	CS
16	335°	1	-	-	NEMA 2-HOLE GROUNDING PAD	304SS
17	110°	1	∅4"	BW	FILTER OVERFLOW	CS

NOTES:

SHIPPING WT. .....5,000 LBS.
FLOODED WT. .....38,500 LBS.
ANCHOR BOLT UPLIFT (EACH).....12,000 LBS. [MAX]
BACKWASH FLOW (PEAK).....510 GPM

1. PURCHASER IS RESPONSIBLE FOR FOUNDATION DESIGN PER DESIGN DATA GIVEN. PURCHASER SUPPLIES LABOR AND MATERIAL FOR FOUNDATION, ANCHORAGE. SUMP AND DRAIN. SUMP AND DRAIN TO BE OF AMPLE SIZE TO CARRY PEAK BACKWASH FLOW LISTED.
2. TANK CONNECTION LOCATIONS ARE SUBJECT TO STANDARD FABRICATING TOLERANCES. INSTALLING CONTRACTOR TO MAKE PROVISIONS FOR THIS IN FIELD CONNECTED PIPING.
3. ALL FLANGES ARE STEEL, FLAT-FACED WITH ANSI B16.5 CLASS 150 DRILLING. BOLT HOLES STRADDLE CENTERLINES.
4. SHOP PAINTING/CLEANING:
   INTERIOR PAINT:
   PAINT: .....CARBOLINE 300M
   2 COATS

   EXTERIOR PAINT:
   PAINT: .....CARBOLINE 60
   FINISH COLOR: .....WHITE
   1 COAT
5. VALVES ARE PAINTED WITH MANUFACTURER'S STANDARD COATING SYSTEM.
6. MEDIA RETAINING STRAINERS ARE FIELD INSTALLED. MEDIA IS FURNISHED IN PALLETIZED BAGS FOR FIELD LOADING.
7. VENT PIPING FROM CONNECTION (9) TO FLOW SPLIT BOX, FURNISHED IN RANDOM LENGTHS WITH LOOSE FITTINGS FOR FIELD INSTALLATION. THE CHECK VALVE PROVIDED TO BE INSTALLED IN HORIZONTAL, ABOVE TOP OF SPLIT BOX ELEVATION. AIR SCOUR SUPPLY PIPE TO BE LOOPED ABOVE TOP OF FLOW SPLIT BOX ELEVATION TO PREVENT BACK FLOW OF WATER TO BLOWER.

UNLESS OTHERWISE SPECIFIED:
DIMENSIONS ARE IN INCHES
TOLERANCES (UNLESS OTHERWISE SPECIFIED:
FRACTIONAL ± 1/8"
ANGULAR: ± 0.5°
TWO PLACE DECIMAL ± 0.030"
THREE PLACE DECIMAL ± 0.005"

DO NOT SCALE DRAWING
SCALE: 1:20
MATERIAL: MATR'L
3RD ANGLE PROJECTION

	NAME	DATE
DRAWN	TK	3/21/2022
CHECKED	MS	3/22/2022
APPROVED	DM	3/22/2022

PROJECT: MONOSCOUR FILTER REPLACEMENT
CLIENT: SUGARBUSH MOUNTAIN RESORT
ENGINEER:
LOCATION: WARREN, VT

Marmon Industrial Water
A Berkshire Hathaway Company
ECODYNE GRAVER

TITLE: LAYOUT
MONOSCOUR FILTER - SINGLE COMP.
6' DIA X 16' HIGH
FILTER NO. 1

SIZE: D
DWG. NO. 14082-M-D-2000
REV: B

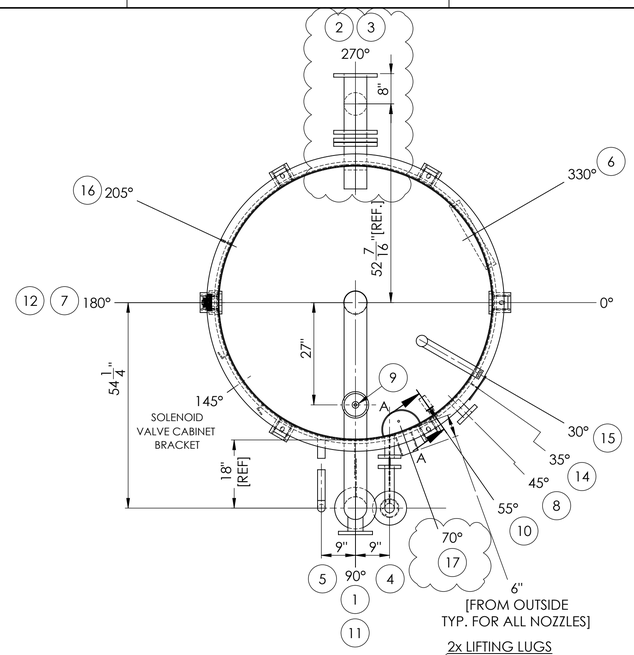

PLAN
SCALE 1 : 20

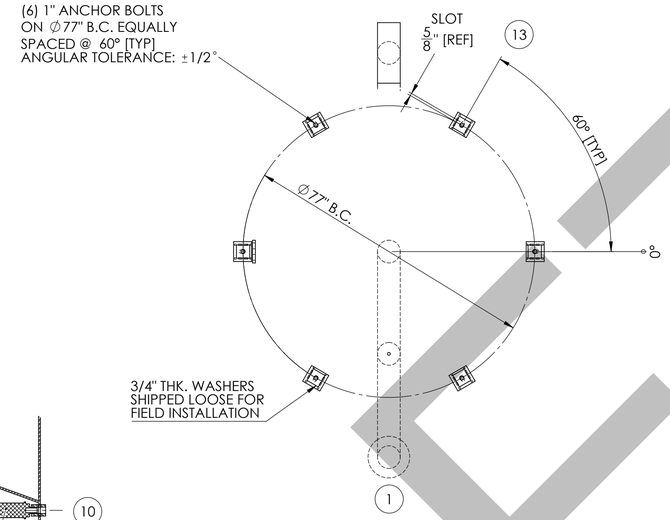

ANCHOR BOLT LOCATION

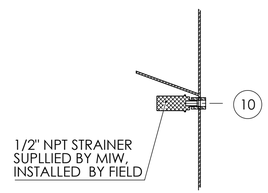

SECTION A-A
PRESSURE SWITCH
STRAINER INSTALLATION
SCALE 1 : 10

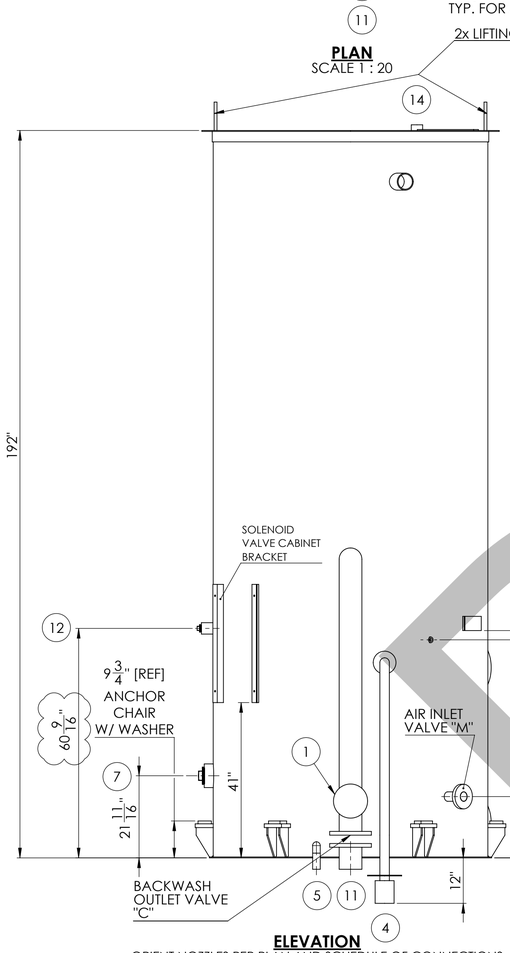

ELEVATION
ORIENT NOZZLES PER PLAN AND SCHEDULE OF CONNECTIONS
SCALE 1 : 20

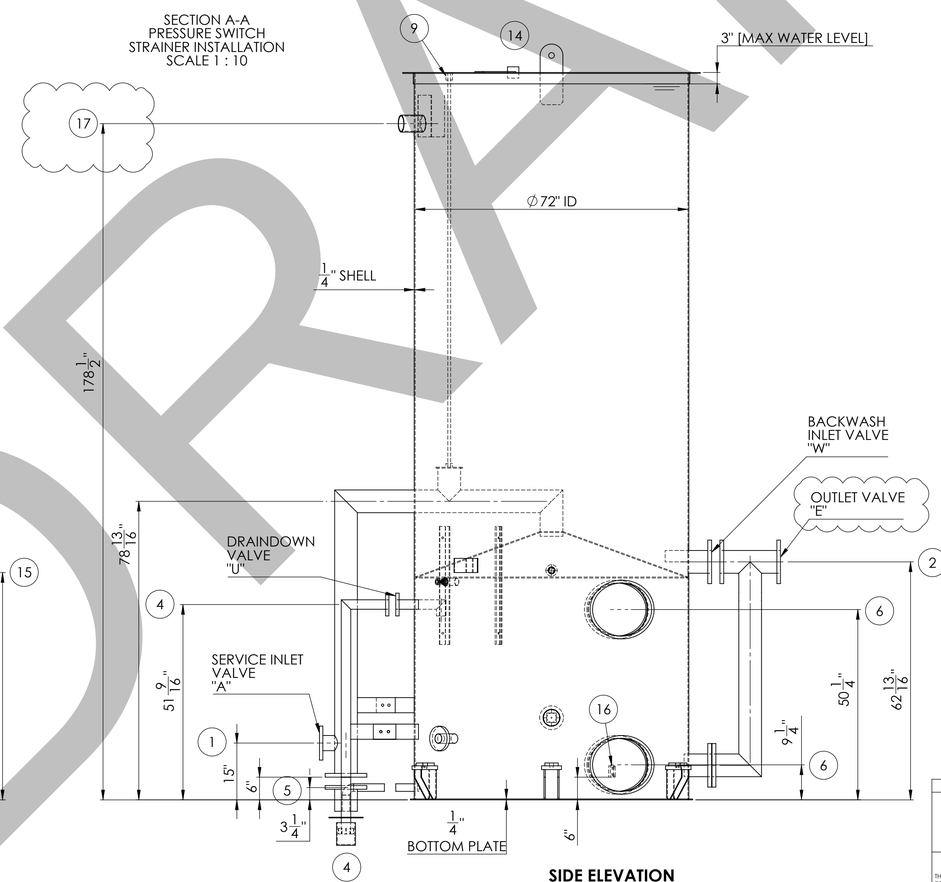

SIDE ELEVATION
ORIENT NOZZLES PER PLAN AND SCHEDULE OF CONNECTIONS
SCALE 1 : 20

REVISIONS				
REV.	DATE	DESCRIPTION	DRAWN BY	CHECKED BY
A	3/22/2022	INITIAL ISSUE	TK	MS
B	4/19/2022	NOZZLE ROTATION PER CLIENT COMMENTS AND VALVE SIZE CORRECTIONS	TK	MS

SCHEDULE OF CONNECTIONS AND OPENINGS						
ITEM	ORIENT. DEG.	QTY.	SIZE	TYPE CONN.	DESCRIPTION	MATERIAL
1	90°	1	∅4"	FLG'D	INLET	CS
2	270°	1	∅6"	FLG'D	OUTLET	CS
3	270°	1	∅6"	-	BACKWASH INLET	CS
4	-	1	∅2 1/2"	-	DRAINDOWN	CS
5	-	1	∅2"	THD	DRAIN	CS
6	330°	2	14"x18" ellip.	-	MANHOLE	CS
7	180°	1	∅4"	THD	MEDIA DRAIN (W/PLUG)	CS
8	45°	1	∅2 1/2"	FLG'D	AIR INLET	CS
9	90°	1	∅3/4"	THD	VENT	CS
10	55°	1	∅1/2"	THD	PRESSURE SWITCH	CS
11	90°	1	∅6"	-	BACKWASH OUTLET	CS
12	180°	1	∅1 1/2"	THD	STORAGE COMPARTMENT DRAIN (w/PLUG)	CS
13	-	6	-	-	ANCHOR CHAIRS	CS
14	35°	1	-	-	INTERLOCK LEVEL SWITCH	CS
15	30°	1	-	-	MIW NAMEPLATE	CS
16	205°	1	-	-	NEMA 2-HOLE GROUNDING PAD	304SS
17	70°	1	∅4"	BW	FILTER OVERFLOW	CS

NOTES:

SHIPPING WT. .....5,000 LBS.
FLOODED WT. .....38,500 LBS.
ANCHOR BOLT UPLIFT (EACH).....12,000 LBS. [MAX]
BACKWASH FLOW (PEAK).....510 GPM

1. PURCHASER IS RESPONSIBLE FOR FOUNDATION DESIGN PER DESIGN DATA GIVEN. PURCHASER SUPPLIES LABOR AND MATERIAL FOR FOUNDATION, ANCHORAGE. SUMP AND DRAIN. SUMP AND DRAIN TO BE OF AMPLE SIZE TO CARRY PEAK BACKWASH FLOW LISTED.
2. TANK CONNECTION LOCATIONS ARE SUBJECT TO STANDARD FABRICATING TOLERANCES. INSTALLING CONTRACTOR TO MAKE PROVISIONS FOR THIS IN FIELD CONNECTED PIPING.
3. ALL FLANGES ARE STEEL, FLAT-FACED WITH ANSI B16.5 CLASS 150 DRILLING. BOLT HOLES STRADDLE CENTERLINES.
4. SHOP PAINTING/CLEANING:
   INTERIOR PAINT:
   PAINT: .....CARBOLINE 300M
   2 COATS

   EXTERIOR PAINT:
   PAINT: .....CARBOLINE 60
   FINISH COLOR: .....WHITE
   1 COAT
5. VALVES ARE PAINTED WITH MANUFACTURER'S STANDARD COATING SYSTEM.
6. MEDIA RETAINING STRAINERS ARE FIELD INSTALLED. MEDIA IS FURNISHED IN PALLETIZED BAGS FOR FIELD LOADING.
7. VENT PIPING FROM CONNECTION (9) TO FLOW SPLIT BOX, FURNISHED IN RANDOM LENGTHS WITH LOOSE FITTINGS FOR FIELD INSTALLATION. THE CHECK VALVE PROVIDED TO BE INSTALLED IN HORIZONTAL, ABOVE TOP OF SPLIT BOX ELEVATION. AIR SCOUR SUPPLY PIPE TO BE LOOPED ABOVE TOP OF FLOW SPLIT BOX ELEVATION TO PREVENT BACK FLOW OF WATER TO BLOWER.

UNLESS OTHERWISE SPECIFIED:
DIMENSIONS ARE IN INCHES
TOLERANCES (UNLESS OTHERWISE SPECIFIED:
FRACTIONAL ± 1/8"
ANGULAR: ± 0.5°
TWO PLACE DECIMAL ± 0.030"
THREE PLACE DECIMAL ± 0.005"

DO NOT SCALE DRAWING
SCALE: 1:20
MATERIAL: MATR'L
3RD ANGLE PROJECTION

	NAME	DATE
DRAWN	TK	3/21/2022
CHECKED	MS	3/22/2022
APPROVED	DM	3/22/2022

PROJECT: MONOSCOUR FILTER REPLACEMENT
CLIENT: SUGARBUSH MOUNTAIN RESORT
ENGINEER:
LOCATION: WARREN, VT

Marmon Industrial Water
A Berkshire Hathaway Company
ECODYNE GRAVER

TITLE: LAYOUT
MONOSCOUR FILTER - SINGLE COMP.
6' DIA X 16' HIGH
FILTER NO. 2

SIZE D | DWG. NO. 14082-M-D-2001 | REV B

5.1.1. Technical Data

TABLE 5.1.1 TECHNICAL DATA: MONOSCOUR GRAVITY FILTERS		
EQUIPMENT DATA		
	Quantity	3
	Number of Compartments per Filter	1
	Design Flow	800 gpm per filter
	Max Flo	
TOP LAYER:	Material	Anthracite FA-112
	Media Depth	1 feet 6 inches
BOTTOM LAYER:	Material	Filter Sand FS-45
	Media Depth	1 foot 0 inches

Does not reflect equipment supplied on project 14082.

5.1.2. Installation

Prior to installation of the monoscour gravity filter the concrete foundation must be poured, cured and inspected. The monoscour gravity filters can then be installed. Once the filters have been placed and any interconnecting piping fit up issues corrected the vessels should be anchored to the concrete foundation pads. Finally, any open space between the concrete foundation pad and the vessel should be filled with grout to prevent the filter bottom from flexing when filled.

5.1.2.1. Pre-Commissioning Check List

The installation should be completed in accordance with the erection drawings and instructions furnished by the Graver Engineering Department. However, a preliminary inspection, prior to start-up must be made to check all details of construction and to make all necessary adjustments to the various components of the system. The following check-off list is furnished to facilitate this work and can be used in conjunction with the applicable drawings as listed on the Graver Bill of Material.

TABLE 5.1.2: PRELIMINARY EQUIPMENT CHECKLIST

CHKD	EQUIPMENT	ITEMS TO CHECK
	Connections	Check for proper installation of all connections for each media filter. Improper connections could lead to leaks which may reduce the effectiveness of the filter.
	Monoscour Filter Vessels	The monoscour filter manways, strainers, and vessel should be checked for wear prior to media loading. All strainers must be installed properly to ensure effective operation of the vessels. The strainer plate and top distributor should be checked for proper welding. Graver should be informed of any issues with the monoscour filter integrity before operation can commence. After all of the above have been checked, media can be loaded into the vessel. Media levels should be measured out and marked on the side of the vessel. The media should be properly spread and backwashed prior to system operation All hand valves attached to the filter should be tested prior to operation.
	Field Instruments	All Transmitters, Orifice plates, should be checked for proper installation. Orifice plates and associated Flow transmitter should be tested using system flow only after all lines have been tested for leakage. All pressure gauges should be tested for accuracy, and the operator should ensure proper values from the transmitters appear on the HMI.

5.1.2.2. **Internal Installation**

The strainers are specially designed for use in the underdrain system of filters and are used on installations where operating temperature does not exceed 185°F. The strainers are installed at the plant site. The strainer should be installed as instructed on the Strainer Assembly Drawing A-37738 If there is any doubt that a strainer is not properly installed, it must be removed and reinstalled. No special tools are required for installation.

CAUTION

Where anthracite (hard coal) is used as the upper layer, take care to avoid spark ignition of coal dust because it can be explosive in confined spaces. Thus, before entering, be sure the filter has been sufficiently purged with fresh air and that constant ventilation is provided while loading.

FIGURE 5.1.6: Partilok STRAINER ASSEMBLY

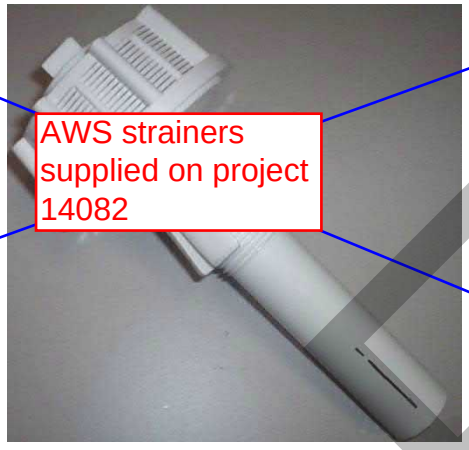

NOTE: The loading of media must not proceed without final inspection and approval of the strainer installation by a Graver Field Engineer. Unless a Graver Field Engineer inspects the strainer installation, Graver Water Systems cannot assume the responsibility for loss of media and will not assume the responsibility for the cost of replacing the media and the associated related labor costs

5.1.2.3. **Media Installation**

When the filter media arrives at the jobsite and is unloaded, it is recommended that if space permits to separate the bags according to the different types of media. The filters have two types of media: sand and anthracite. Both media are generally shipped in one cubic foot bags. The sand weighs approximately 100 pounds per cubic foot bag and the anthracite weighs approximately 52 pounds per cubic foot bag. The media should be stored off the ground in a dry place. Take care to avoid damage to the containers and keep spillage and contamination down to a minimum.

All media that is supplied by Graver Water should be checked against the Graver Bill of Material for the volume shipped. Any shortage, breakage, or spillage is to be reported immediately to the carrier and to Graver. Otherwise, Graver cannot accept responsibility for claimed irregularities.

5.1.2.4. **Internal Loading**

As stated previously, two types of media are being provided for the monoscour filters:

- Bottom layer is sand and is 1 Foot 0 Inches.
- Top layer is anthracite and is 1 Feet 0 Inches.

Before the media is loaded into the monoscour filters, it is recommended to mark the filter bed depths on the inside of the cell walls as a guide.

Considerable care should be used when loading media into the filter compartments. The first precaution is to remove any foreign material or debris from the filters.Extreme care must be taken when lowering the media into the filter and spreading it over the strainers. Do not shovel or dump the media onto the strainers directly. Keep 12 inches of water above the strainers when loading. In addition, loading should be controlled to avoid damaging the internals and dropping foreign material into the filter.

After marking approximate depth of each layer in the filter compartments, the sand layer is to be loaded into the filter compartments and then backwashed. The filter then should be drained and any residual sand fines not washed out during the backwashing will need to be scraped from the top surface of the sand layer. After the fine sand layer is scraped, the anthracite is loaded, soaked, backwashed, and scraped.

Dry Loading

Dry loading the media into the filter is accomplished using any means convenient and is generally the way the media is loaded into the filter. If a conveyor is available it may be set up to dump the sand directly. Otherwise the bags of media can be dumped directly into the filter. Remember to maintain 12 inches of water above the strainers when loading the sand layers. Care should also be taken to prevent scraps of bags and papers from entering the filter.

Wet Loading

Wet loading of the media can be accomplished by use of an eductor. The necessary equipment to load the media by eduction includes a 55-gallon drum, a wooden paddle, and an eductor with adequate water supply. In this case, the media is shoveled into the 55-gallon drum while water is added in sufficient quantity for a man with the paddle, to keep mixed slurry from settling out. The slurry is then pumped to the filter by means of the eductor. The filter drain must be opened when the water level in the filter approaches the bottom of the manway. Remember to maintain 12 inches of water above the strainers when loading the media.

Media Spreading

Once a considerable portion of each media layer is loaded into a filter it may be necessary for a man to enter the filter for preliminary media spreading. After initial spreading, the man must exit out of the filter for further media loading.

The filter should be loaded to an average depth of ½ inch more than called for in the specification, since the removal of as much as one-inch of media fines after backwashing and scrapping is anticipated. 5% excess of media is provided for the fine sand and anthracite for this purpose. The bed should be raked again as level as conveniently possible. However, since backwashing will accomplish final leveling, excessive effort should not be expended in this operation.

5.1.2.1. Initial Backwash and Scraping Procedures

Backwashing and Scraping the Sand Layer

The sand layer should be backwashed at the nominal backwash rate of 1360 gpm until the backwash water coming out of the filter is clear, approximately 10 minutes.

Then the sand should be backwashed at a rate that washes out fines but not the full sized sand. The backwash should continue until the backwash water coming out of the filter cell is clear. When the backwash is complete, the filter cell is drained. The operator then observes the sand layer and if most of the sand fines have been washed out during backwashing, the sand layer does not have to be scraped. If the sand fines exist then approximately ½ inch of the top of the sand layer is scraped to remove the fines. The sand can be scraped using a dustpan or any tool that can remove ½ inch of media.

The water used for backwashing may come from a temporary source and should be clean and contain less than 10 ppm suspended solids.

CAUTION

During any backwashing period, observe backwash outlet water for signs of full size media. If some appear, reduce backwash rate immediately, then resume backwashing slowly approaching a safe rate.

Backwashing and Scraping the Anthracite Layer

After scraping the top surface of the sand layer for removal of sand fines, the entire process is repeated for the anthracite layer. After loading of the anthracite, the anthracite layer should be allowed to soak overnight before backwashing. Soaking the anthracite overnight helps fill the voids in the anthracite and prevents the large particles of anthracite exiting the filter from while being backwashed. It is important to gradually increase the backwash rate. The backwashing of the anthracite should be done manually. If possible, backwash the anthracite layer at a rate of 50% (678) of the nominal design backwash rate of 1360 gpm for 5 minutes or until the backwash water coming out of the filter cell is clear. Then, increase the flow to the design backwash rate of 1360 gpm and again backwash for 5 minutes or until the backwash water coming out of the filter cell is clear. This incremental backwashing helps separate the fines from the whole particles to allow for grading of the bed. When the backwash is complete, the filter cell is drained. The anthracite fines are then scraped from the top of the filter bed. Generally, a scraping of approximately ½ inch across the filter bed surface will suffice to remove the residual layer of fines.

5.1.3. Operations

5.1.3.1. Commissioning Check List

TABLE 5.1.3: COMMISSIONING CHECK LIST

CHKD	EQUIPMENT	ITEMS TO CHECK
	Automatic ON-OFF Valves	Stroke all valves and confirm valve operates through full range. Adjust valve limit stops where applicable. Confirm all applicable signals to and from the PLC system. Especially, limit switch signals to the PLC, full open and full close when applicable.
	Connections	Assure that there are no leaks in the connections.
	Monoscour Filter Vessels	Assure that vessel(s) manways are properly sealed and vessel(s) has no leaks. Confirm proper valve sequence for normal service and filter backwash (drain down, air scour, and backwash). Adjust the backwash cycle timing appropriately. Assure that backwash cycle initiates upon head pressure alarm activation. Confirm media was backwashed prior to startup.
	Field Instruments	All Transmitters, Orifice plates, and Pressure relief valves should be checked for proper installation. Orifice plates and associated Flow transmitter should be tested using system flow only after all lines have been tested for leakage. All pressure gauges should be tested for accuracy, and the operator should ensure proper values from the transmitters appear on the HMI.

5.1.3.2. Start-up Operations

5.1.3.3. Normal Operations

(For normal flow paths of the Monoscour Filters, see section 7.1.1 – Process Description)

The Service Mode is the normal operating mode for the Monoscour Filter. Particulate matter, suspended in the influent flow, is removed by passing the feed stream through a media filter bed of sand and anthracite. In the Service Mode, the valves that are open on the filter are the Service Inlet Valve and the Backwash Inlet Valve. All other valves on the Monoscour Filter are closed during this mode of operations.

During normal operation of the system, the service time is based on the head pressure in Monoscour Filter. The head pressure is measured and transmitted via a pressure transmitter and displayed on the Operating Interface Display. When the head pressure measurement is equal to or rises above the setpoint, an alarm will be activated on the Operating Interface Display. Upon activation of the alarm, a backwash operation will begin. All steps in the backwash cycle will be

automatically controlled by the PLC system unless specified by the operator. However, the Operator will have the ability to initiate a backwash manually, if desired.

5.1.4. Troubleshooting (Abnormal Operations)

TABLE 5.1.4: Troubleshooting Guide

SYMPTOMS	CAUSES	CHECK POINTS
1. Poor effluent water	**1.** Dirty or upset filter bed	**a.** Backwash rate too low rate to wash out debris. **b.** Backwash of bed, not frequent enough. **c.** Inspect filter bed, may be channeled, mounded, or short in depth.
2. Backwashing time too long.	**1.** Backwashing cycle timing set too long.	**a.** Reset backwash step time
3. Backwashing time too short.	**1.** Backwashing cycle timing set too short.	**a.** Reset backwash step time
4. Time between backwashes too short.	**1.** Bed not being washed sufficiently. **2.** Pressure switch set to low. **3.** Fouled media	**a.** Increase backwash rate. **b.** Reset differential setpoint. **c.** Backwash filters.
5. Time between backwashes too high	**1.** Filter bed may be channeled. **2.** Pressure switch set to high.	**a.** Determine the cause of channeling, correct and then clean bed, add media if needed. **b.** Reset differential setpoint.
6. Filter bed channeled	**1.** Filter bed dirty	**a.** Not backwashed often enough.

		b. Backwash rate too low, increase opening backwash rate. **c.** Media beyond cleaning replace with new, clean fresh media.
7. Backwash cycle not initiating.	**1.** Backwash inlet valve not opening.	**a.** Check actuator operator for malfunction. **b.** Check backwash permissives.
8. Media in Inlet.	**1.** Backwash rate too high.	**a.** Reset backwash rate.
9. Media in Effluent.	**1.** Broken or loose strainer assembly.	**a.** Inspect for strainer assembly integrity.

5.1.5. Maintenance

The maintenance of the Monoscour Gravity Filters relies on a daily visual inspection. The visual inspection should focus on leaks and signs of corrosion. Leaks should be corrected immediately while areas of corrosion should be noted and scheduled for maintenance at the earliest possible date.

Proper backwashing of the filters when indicated by the opening of the pressure switches for the individual monoscour filters. The procedure for backwashing the filters are detailed below.

5.1.5.1. Backwash Procedures

Backwashing Precautions

The correct backwash rate for different types of media varies widely not only with the types of media, but also with the temperature of the water used for backwashing. The correct backwashing rate is the maximum rate at which media is not washed out to waste.
The correct backwash rate ***must be determined*** in the field under actual operating conditions and it should be remembered that even this rate will vary with changing water temperatures. Graver will not be held responsible for media lost due to improper backwashing.

Proper adjustment of the speed control on the solenoid valves to the backwash outlet valves is important. The intention is to gradually open the backwash outlet valve to waste and build up to

the desired rate slowly. Sudden acceleration (rapid velocity build-up) could cause carryover of media to waste at the start of backwashing or could upset the bed.

Backwash Rate Adjustment

After the monoscour filter cells have been installed and initial washing of fines has been completed, the backwash outlet valve must be set to control backwash rate. With more than one filter in the system, one filter will be trial backwashed with the others in service. These are then backwashed and set, in turn.

The backwash outlet valve should be set that no full size media comes out of the filter during backwash. The backwash outlet valve is set using the limit stops on the valve. After the backwash outlet valve has been properly set for one filter, the remaining filter cell is set.

.

BILL OF MATERIAL				
ITEM	PART NUMBER (DWG)	QTY.	DESCRIPTION	MAT'L
1	P/N 01-32-002(R-28814)	1	BODY	PLASTIC
2	P/N 01-32-020 (N-27122)	1	NOZZLE BASE	PLASTIC
3	FOR P/N & DWG. SEE JOB B/M	1	BOLT	PLASTIC
4	P/N 01-22-682 (N-29217)	1	LARGE WASHER	NEOPRENE

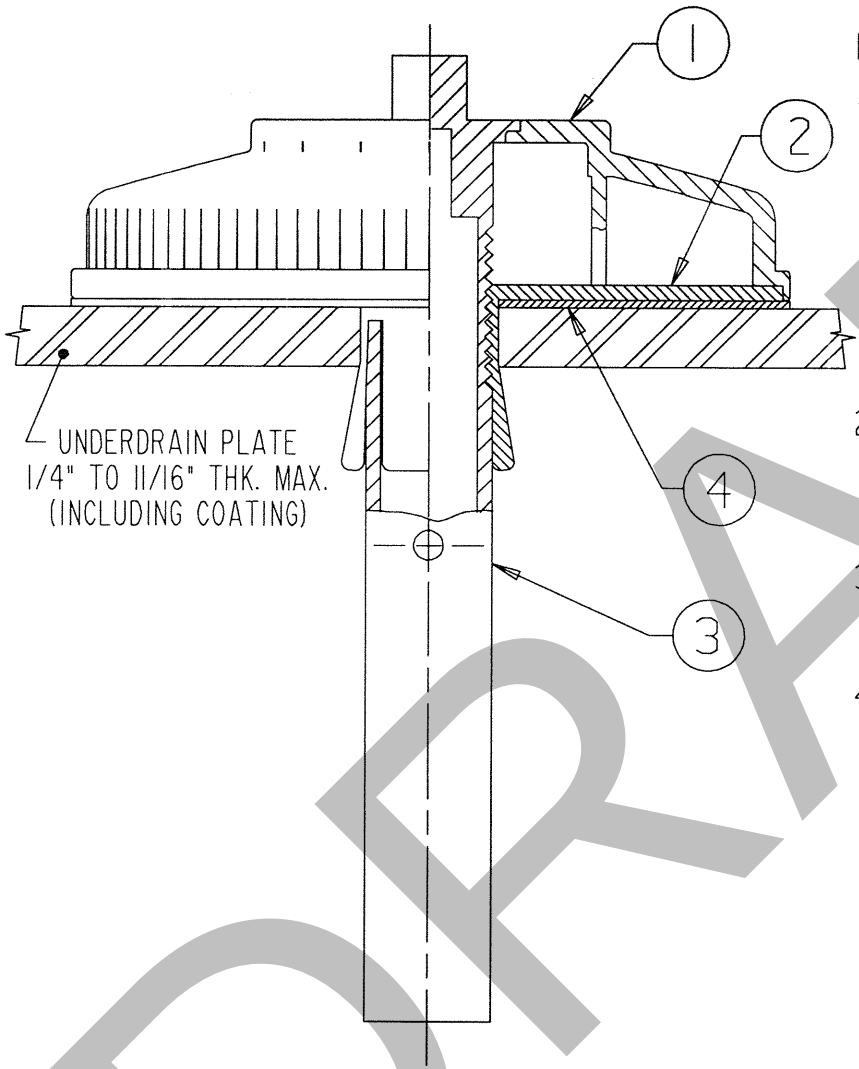

INSTALLATION INSTRUCTIONS:

1. INSERT PART 1 INTO PART 2, INSERT PART 4 UNDER PART 2 (AS REQUIRED), THEN INTO UNDERDRAIN PLATE, PUSH DOWN HARD AND HOLD WITH ONE HAND WHILE MAKING UP PART 3 WITH A HAND WRENCH UNTIL IT SEATS FLUSH INTO PART 1.

   DO NOT USE POWER TOOLS.
   DO NOT OVER TIGHTEN.

2. ENTIRE ASSEMBLY SHOULD BE TIGHT IN PLACE. NOW TURN PART 3 ANOTHER QUARTER TURN. INSTALLATION IS COMPLETE.
3. CHECK BY TRYING TO TURN AND OR LIFT ASSEMBLY BY HAND. IT SHOULD NOT MOVE.
4. DO NOT USE ABOVE 185^{0} F.

P/N 0400045

INSTALLATION

PAT PENDING

"AWS" UNDERDRAIN NOZZLE FOR 1/4" TO 11/16" THK. PLATE RETROFIT

					SCALE	NONE	
						BY	DATE
					DRAWN		
A	1-9-01	INITIAL ISSUE	AL		CHECKED		
REV.	DATE	REMARKS	BY	CHK.	CERTIFIED		

GRAVER WATER
Division of The Graver Company
MARMON
A member of The Marmon Group of companies

A-37738 REV. A

2000-A-SIZE

01-01-11 8:34:11 CAD FILE: STD.PENDING.M.WT.A-37738

Attachment C: Additional Blower Information

IQ-RB BLOWER PACKAGES

Operating and Service Manual

MODELS
IQRBF1A, IQRBF2A, IQRBF3A,
IQRBF4A, IQRBF5A, IQRB99A

IQRB-100
Version 00
July 9, 2019

MAINTAIN BLOWER RELIABILITY AND PERFORMANCE WITH GENUINE GARDNER DENVER PARTS AND SUPPORT SERVICES

Factory genuine parts, manufactured to design tolerances, are developed for optimum dependability - - - specifically for your blower. Design and material innovations are born from years of experience with hundreds of different blower applications. When you specify factory genuine parts you are assured of receiving parts that incorporate the most current design advancements manufactured in our state-of-the-art blower factory under exacting quality standards.

Your AUTHORIZED DISTRIBUTOR offers all the backup you require. A worldwide network of authorized distributors provides the finest product support in the blower industry.

Your AUTHORIZED DISTRIBUTOR can support your blower investment with these services:

1. Trained parts technical representatives to assist you in selecting the correct replacement parts.

2. Complete inventory of new machines and new, genuine factory parts.

3. A full line of factory tested AEON™ PD blower lubricants specifically formulated for optimum performance in all blowers.

4. Authorized distributor service technicians are factory-trained and skilled in blower maintenance and repair. They are ready to respond and assist you by providing fast, expert maintenance and repair service.

INSTRUCTIONS FOR ORDERING REPAIR PARTS

For pricing, and ordering information, contact your nearest AUTHORIZED FACTORY DISTRIBUTOR. When ordering parts, specify Blower **MODEL** and **SERIAL NUMBER** (see nameplate on unit).

Rely upon the knowledge and experience of your AUTHORIZED DISTRIBUTOR and let them assist you in making the proper parts selection for your blower.

For the location of your local authorized Gardner Denver blower distributor refer to the yellow pages of your phone directory, check the Web site at www.gardnerdenverproducts.com or contact:

Gardner Denver Incorporated
1800 Gardner Expressway
Quincy, IL 62305
Phone: (217) 222-5400
Fax: (217) 221-8780

FOREWORD

Gardner Denver® blowers are the result of advanced engineering and skilled manufacturing. To be assured of receiving maximum service from this machine, the owner must exercise care in its operation and maintenance. This book is written to give the operator and maintenance department essential information for day-to-day operation, maintenance and adjustment. Careful adherence to these instructions will result in economical operation and minimum downtime.

DANGER

Danger is used to indicate the presence of a hazard which will cause severe personal injury, death, or substantial property damage if the warning is ignored.

Equipment starts automatically

Health Hazard – Explosive Release of Pressure

Cutting of Finger or Hand Hazard – Rotating impeller blade

High Voltage – Hazard of Shock, Burn, or Death Present until Electrical Power is Removed

Asphyxiation Hazard – Poisonous Fumes or Toxic Gases in Compressed Air

Entanglement of Fingers or Hand/Rotating Shaft

WARNING

Warning is used to indicate the presence of a hazard which can cause severe personal injury, death, or substantial property damage if the warning is ignored.

NOTICE
Notice is used to notify people of installation, operation or maintenance information which is important but not hazard-related.

PROHIBITION/MANDATORY ACTION REQUIREMENTS

Do not Operate Compressor with Guard Removed

Lockout Electrical Equipment in De-Energized State

Do Not Lift Equipment with Hook – No Lift Point

Loud Noise Hazard – Wear Ear Protection

Handle Package at Forklift Points Only

Read the Operator's Manual before Proceeding with Task

SAFETY PRECAUTIONS

Safety is everybody's business and is based on your use of good common sense. All situations or circumstances cannot always be predicted and covered by established rules. Therefore, use your past experience, watch out for safety hazards and be cautious. Some general safety precautions are given below:

⚠ DANGER

Failure to observe these notices could result in injury to or death of personnel.

- **Keep fingers and clothing away from blower inlet and discharge ports, revolving belts, sheaves, drive coupling, fans, etc.**
- **Do not use the air discharge from this unit for breathing – not suitable for human consumption.**
- **Do not loosen or remove the oil filler plug, drain plugs, covers, or break any connections, etc., in the air or oil system until the unit is shut down and the air pressure has been relieved.**
- **Electrical shock can and may be fatal.**
- **Unit must be grounded in accordance with the National Electrical Code.**
- **Open main disconnect switch, tag and lockout before working on the control.**
- **Disconnect the unit from its power source, tag and lockout before working on the unit – this machine may be automatically controlled and may start at any time.**

⚠ WARNING

Failure to observe these notices could result in damage to equipment.

- **Stop the unit if any repairs or adjustments on or around the blower are required.**
- **Disconnect the unit from its power source, tag and lockout before working on the unit – this machine maybe automatically controlled and may start at any time.**
- **Do not exceed the rated maximum speed values shown on the nameplate.**
- **Do not operate unit if safety devices are not operating properly. Check periodically. Never bypass safety devices.**
- **Ensure proper rotation of blower prior to start-up. Failure to do so may result in damage to the blower.**

TABLE OF CONTENTS

MAINTAIN BLOWER RELIABILITY AND PERFORMANCE 2

INSTRUCTIONS FOR ORDERING REPAIR PARTS 2

FOREWORD 3

SAFETY PRECAUTIONS 5

INTRODUCTION YOUR KEY TO TROUBLE FREE SERVICE 9

SECTION 1, EQUIPMENT CHECK 10

SECTION 2, INSTALLATION 12

SECTION 3, OPERATION 26

SECTION 4, MAINTENANCE 37

SECTION 5, TROUBLE SHOOTING 47

WARRANTY 50

INDEX

Equipment Check, Section 1 10
Storage 10
Removing Protective Materials 11
Installation, Section 2 12
Foundations, Drive Preparation, Electrical 12
Layout, Pipe-Lines 13
Securing Packages to Floor 14
Indoor Installation 15
Outdoor Installation 16
Estimated Drive Motor Current Ratings 24
Estimated Fan Motor Current Ratings 25
Operation, Section 3 26
Piping 26
Lubrication, Air Filters and Silencers 27
Performance Limits and Working Conditions ... 28
Forbidden Uses 29
Residual Risk 30
Package Startup Checklist 31
Relief Valve Setting 34
Inlet Silencer Setting 36
Maintenance, Section 4 37
Oil Change 37
Synthetic Lubricant 39
Motor Bearings Regreasing 40
Check V-Belt Tension 41
Belt Replacement 42
Belt Tensioning Requirements 43
Filter Replacement 44
Replacing Shaft Seal 45
Replacing Shaft Seal 46
Trouble Shooting, Section 5 47
Safety Precautions, Problems & Causes 47

LIST OF ILLUSTRATIONS

FIGURE-2.1 Package Floor Layout 13
FIGURE-2.2 Pipe Lines 13
FIGURE-2.3 Flex Connector Positioning 14
FIGURE-2.4 Tow Motor Lifting 14
FIGURE 2.5 Securing Package to Floor- ENCLOSED 14
FIGURE-2.6 Securing Package to Floor- UNENCLOSED 15
FIGURE-2.7 Ventilation Diagram 15
FIGURE-2.8 thru 2.12 Outline Drawings 17
FIGURE-2.13 Fan and Fan Controller Wiring Diagram 23
FIGURE-2.14 Estimate Blower Drive Motor Full Current Ratings (60Hz) 24
FIGURE-2.15 Estimate Blower Drive Motor Full Current Ratings (50Hz) 25
FIGURE-2.16 Fan Motor and Control Box – Estimated Amperage 25
FIGURE-3.0 Performance Limits 28
FIGURE-3.1 Operation & Checklist Schedule 34
FIGURE-3.2 RVP - Relief Valve Setting 34
FIGURE-3.3 VSM - Relief Valve Setting 35
FIGURE-3.4 RVV - Relief Valve Setting 35
FIGURE-4.0 Oil Drain 37
FIGURE-4.1 Oil Fill 37
FIGURE-4.2 Oil Quantity Table 38

FIGURE-4.3 Synthetic Lubricant Table 39
FIGURE-4.4 Re-Grease Motor Bearings 40
FIGURE-4.5 Belt Tensioning – V-Belts 41
FIGURE-4.6 Belt Tensioning – Synchronous Belts 41
FIGURE-4.7 Belt Guard Removal 42
FIGURE-4.8 Belt Tensioner – Release Tension 42
FIGURE-4.9 Belt Tensioner – Tensioning Belts 42
FIGURE-4.10 V-Belt Tensioning Requirements 43
FIGURE-4.11 V-Belt Deflection Distance 43
FIGURE-4.12 Inlet Filter Replacement & Setting (Frames-1, -2, -3) 44
FIGURE-4.13 Inlet Filter Replacement & Setting (Frames-4, -5) 44
FIGURE-4.14 Inlet Filter Replacement & Setting (Frames-4, -5) 44

INTRODUCTION
YOUR KEY TO TROUBLE FREE SERVICE

Thank you for investing in Gardner Denver quality. The Gardner Denver reputation for rugged dependability has been earned by over 50 years of service in demanding, industrial operations where downtime cannot be tolerated and efficient blower performance is expected.

Your Gardner Denver blower package is a precision engineered blower package that has been carefully manufactured and thoroughly tested at the state-of the-art Gardner Denver Blower Factory in Sedalia, Missouri.

As with other precision machinery, there are several relatively simple installation, operation and maintenance procedures that you must observe to assure optimum blower performance. There is no guesswork in the manufacture of your highly advanced Gardner Denver blower package and there must be none in preparing the blower to get the job done in the field.

The purpose of this manual is to help you properly install, operate and maintain your Gardner Denver blower package. It is essential that you review all sections of this manual in preparation for installing your blower package. Follow the instructions carefully and you will be rewarded with trouble-free Gardner Denver service… year in and year out.

IMPORTANT GARDNER DENVER TELEPHONE NUMBERS

YOUR AUTHORIZED GARDNER DENVER DISTRIBUTION

NAME: _____

TELEPHONE: _____

FAX: _____

CONTACT: _____

THANKS…FOR THE PRIVILEGE OF SERVING YOU WITH DEPENDABLE GARDNER DENVER QUALITY.

SECTION 1
EQUIPMENT CHECK

Before uncrating, check the packing slip carefully to be sure all the parts have been received. All accessories are listed as separate items on the packing slip, and small important accessories such as lubricants and base covers can be overlooked or lost. After every item on the packing slip has been checked off, uncrate carefully. Register a claim with the carrier for lost or damaged equipment.

⚠WARNING

Customers are cautioned to provide adequate protection, warning and safety equipment necessary to protect personnel against hazards involved in installation and operation of this equipment in the system or facility.

STORAGE

Your Gardner Denver Blower Package was packaged at the factory with adequate protection to permit normal storage for up to six (6) months.

If the unit is to be stored under adverse conditions or for extended periods of time, the following additional measures should be taken to prevent damage.

1. Store the blower in a clean, dry, temperature controlled (if possible) area.
2. Make certain inlet (vacuum package only) and discharge air ports are tightly covered to prevent foreign material from entering the air box.
3. All exposed, non-painted surfaces should be protected against rust and corrosion.
4. Provide adequate protection to avoid accidental mechanical damage.
5. In high humidity or corrosive environments, additional measures may be required to prevent rusting of the blower internal surfaces.
6. To prevent rusting of gears, bearings, etc., the oil reservoirs may be filled with normal operating oil.

⚠CAUTION

Before running the blower, drain the oil and replace to the proper operating level with clean, fresh lubricant.

7. Rotate the blower shaft (10 to 25 turns) monthly during storage. Inspect the blower shaft (near the shaft seal area) monthly and spray with rust inhibitor if needed.
8. For long term storage (over six (6) months), contact Gardner Denver Customer Service for recommendations.

REMOVING PROTECTIVE MATERIALS

⚠ CAUTION
Follow the safety directions of the solvent manufacturer.

Package inlet (vacuum package only) and outlet connections are temporarily capped to keep out dirt and other contaminants during shipment. These covers must be removed before start-up.

The internal surfaces of all Gardner Denver blowers are mist sprayed with a rust preventative to protect the machine during shipment. Remove this film upon initial startup, using any commercial safety solvent. Blower internals can be accessed by removing the flexible coupling on either the inlet or discharge side of the blower. Care must be exercised to lock out the blower to prevent start-up.

⚠ WARNING
Rotating components will cause severe injury in case of personal contact. Keep hands away from blower inlet and discharge ports.

On the belt drive, the belt tensioning device has been disabled for shipping. Refer to Section 4 MAINTENANCE - BELT REPLACEMENT for tensioning procedure.

SECTION 2
INSTALLATION

GENERAL

⚠ CAUTION

Do not electric weld on the blower or base; bearings can be damaged by passage of current.

LOCATION

If possible, install the blower in a clean, dry, well-lighted, well ventilated area with plenty of room for inspection and maintenance. It is recommended to maintain a minimum clearance on all sides for control panel access, maintenance and adequate air flow. Refer to Figure-2.1 for dimensions on page 16.

LIFTING UNIT – Proper lifting and/or transporting methods must be used to prevent damage. The blower package is secured to a wood pallet and is to be moved using a tow motor or jack lift.

⚠ CAUTION


Lift the package by base only. Do not use other places such as motors, blowers or discharge piping as lifting points.

The eyebolts or lugs provided on the motors are for lifting the motors only and should not be used to lift any additional weight. All eyebolts must be securely tightened. When lifting the motors, the lifting angle must not exceed 15 degrees. Failure to observe this warning may result in damage to equipment or personal injury.

FOUNDATIONS

Place the package on a firm level surface. For unenclosed – mount to foundation using vibration isolators. The package can be fastened to the foundation using the mounting holes found in each foot. Before securing to a foundation, verify the base perimeter contacts the foundation or floor.

DRIVE PREPARATION

The belt drive has been installed, aligned and tensioned at the factory. The package has an integral, automatic belt tensioning device that is disabled for shipping. To activate automatic belt tensioning, refer to Section 4, pages 43 and 44. If improper tension is suspected, contact Gardner Denver customer service with model and serial number information for drive group and proper tension requirements. Refer to Figure-4.7 & 4.8, page 43.

Check sheave alignment before operating. Alignment may be affected by inappropriate handling while in transit. Belt drives must be carefully aligned. Motor and blower pulleys must be parallel to each other in the same plane within 1/32 inch.

ELECTRICAL

The blower packages are factory wired internally for use with the voltage specified on the order. For enclosed packages, it is only necessary to connect the supply power and ground wires to the provided wire terminal blocks. For an unenclosed package, it is only necessary to connect the supply power and ground wires to the motor junction box. The supply power, protective devices and motor starter components should be installed by a qualified electrical professional in accordance with NEC and any applicable local codes.

Layout

The dimensions and weights of the blower packages are indicated in the outline drawings in FIGURES-2.8 through FIGURES-2.12. The foundation has to be flat and level (max 0.006-in. on 1-ft.) and free from vibrations and suitable to support the weight of unit when no dynamic loads are involved.

NOTICE
Before mounting the blower package to a metal base contact Gardner Denver customer service or an authorized distributor for consultation.

Figure-2.1 below illustrates the recommended layout dimensions for one or more blower packages to allow for adequate installation and maintenance.

WARNING
DO NOT stand in the discharge area of the relief valve while the package is operating.

The doors or the openings of the room must be suitable for the passage of the fork lift.

NOTICE
The "L" dimension in Figure-2.1 must allow adequate room to maneuver a fork lift during package installation.

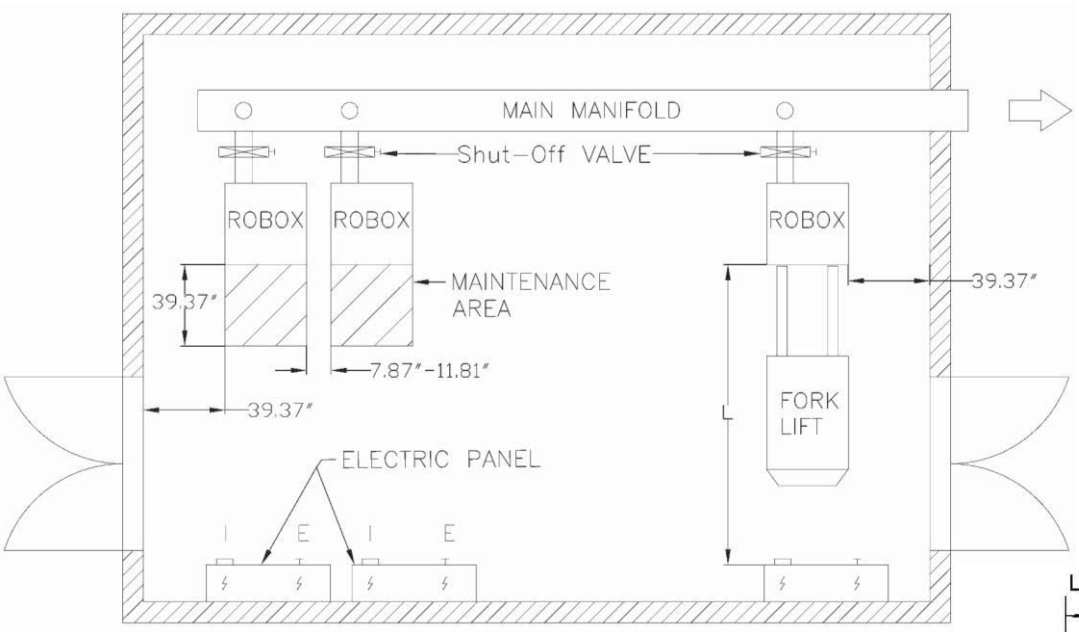

FIGURE-2.1

Pipe-Lines

Provide terminal pipes of the plant following the dimensions indicated in the outline drawings indicated in FIGURES-2.8 through FIGURES-2.12.

- Install always a shut-off valve on the terminal pipes of the plant to insulate the blower package from the plant during service operations.
- Insert the flex connectors and relevant hose clamps on the terminal pipes as indicated in Figure-2.2.

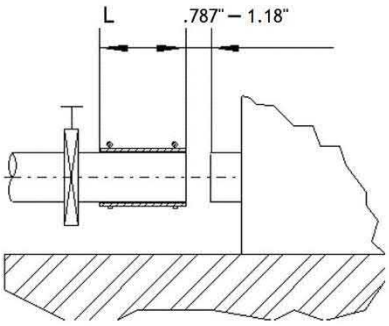

FIGURE-2.2

The flex connector length must be as indicated by "L" dimension in the table at the top of the next page.

FRAME SIZE	1	2	3	4	5
L	7.87”	7.87”	9.06”	9.06”	11.81”

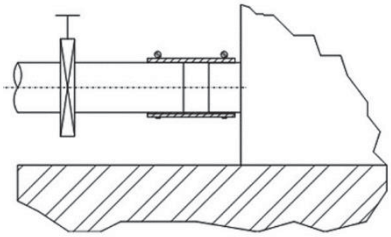

FIGURE-2.3

- Position the package discharge pipe at the distance indicated in Figure-2.2.
- Position the flex connectors in the final position and fasten the hose clamps refer to Figure-2.3.

WARNING
DO NOT stand in the discharge area of the relief valve while the package is operating.

The diameter of the discharge manifold must be chosen in order to obtain an average gas speed of 98.43 ft/s or below.

ON-SITE

ENCLOSED PACKAGES

- Enclosed packages frames 1-2-3 remove the front panel of the noise hood using the key.
- Enclosed packages frames 4-5 remove the panels in the base of the hood.
- Lift the package using a fork lift as indicated in Figure-2.4.

FRAME SIZE	1	2	3	4	5
L	25.59”	35.43”	47.24”	70.87”	70.87”

Position the package in front of the terminal pipe as indicated as shown in Figure-2.3.

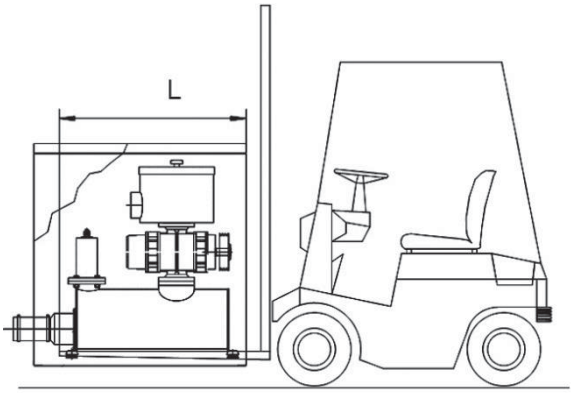

FIGURE-2.4

SECURING PACKAGES TO FLOOR

ENCLOSED PACKAGES

- Remove also the rear panel.
- Drill the floor as indicated in Figure-2.5.
- Fix the feet by expansion bolts.

FRAME SIZE	Expansion Anchor Bolt	Floor Drilling	Floor Drilling
		D in inch	L in inch
1	8 x 71	0.31	2.56
2	12 x 112	0.47	4.13
3	12 x 112	0.47	4.13
4	12 x 112	0.47	4.13
5	See section **UNENCLOSED PACKAGES** next page		

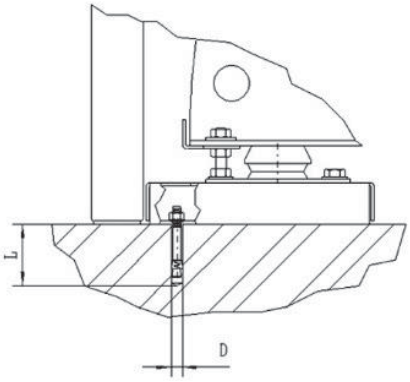

FIGURE-2.5

UNENCLOSED PACKAGES

- Lift the unenclosed package using a fork lift as indicated in Figure-2.4.
- Position the package in front of the terminal pipe as shown in Figure-2.3.
- Drill the floor as shown in Figure-2.6.
- Fix the feet by expansion bolts.

FRAME SIZE	Expansion Anchor Bolt	Quantity	Floor drilling	
			D in inch	L in inch
1	8 x 71	8	0.31	2.56
2	8 x 71	8	0.31	2.56
3	8 x 71	8	0.31	2.56
4	12 x 12	8	0.47	4.13
5	12 x 12	16	0.47	4.13

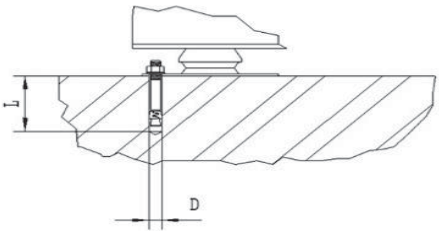

FIGURE-2.6

INDOOR INSTALLATION

Provide adequate ventilation of the blower room as shown in flow diagram Figure-2.7 below.

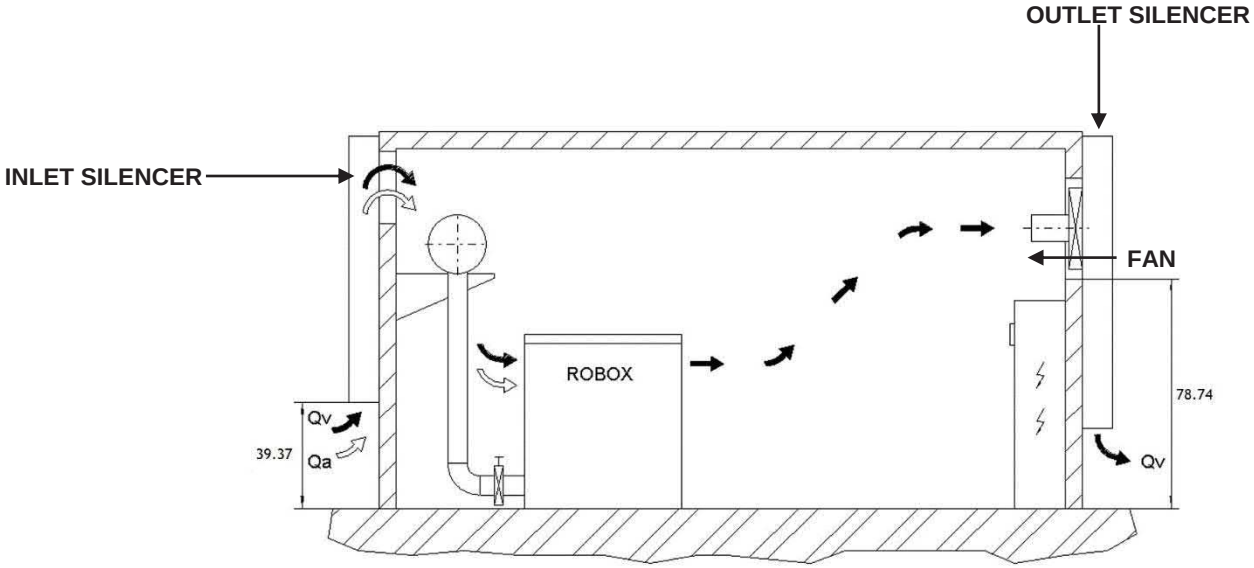

FIGURE-2.7

Qa (CFM) total flow rate sucked by the blowers operating simultaneously.
Qv (CFM) total ventilation flow rate is calculated from the sum No (KW) of the motors operating simultaneously in the local following this relation:

Qv = 30 x No

OUTDOOR INSTALATION

Climatic Conditions	Measures
Strong sunlight	Protect with a canopy
Rainy / Snow	Protect with a canopy
Temperature < - 4 °F	Use only enclosed blower package and heat inside air before any start-up
Wind > 65.62 ft/s.	Protect with windbreak walls
Hoarfrost	Heat inlet silencer
Dust / Sand storm	Special filter with pre-separator

NOTICE
Note: For different climate conditions contact Gardner Denver Inc. or an authorized distributor.

FRAME-1 BLOWER PACKAGES, UNENCLOSED and ENCLOSED, PRESSURE, CLOSED-LOOP and VACUUM OVERALL DIMENSIONS

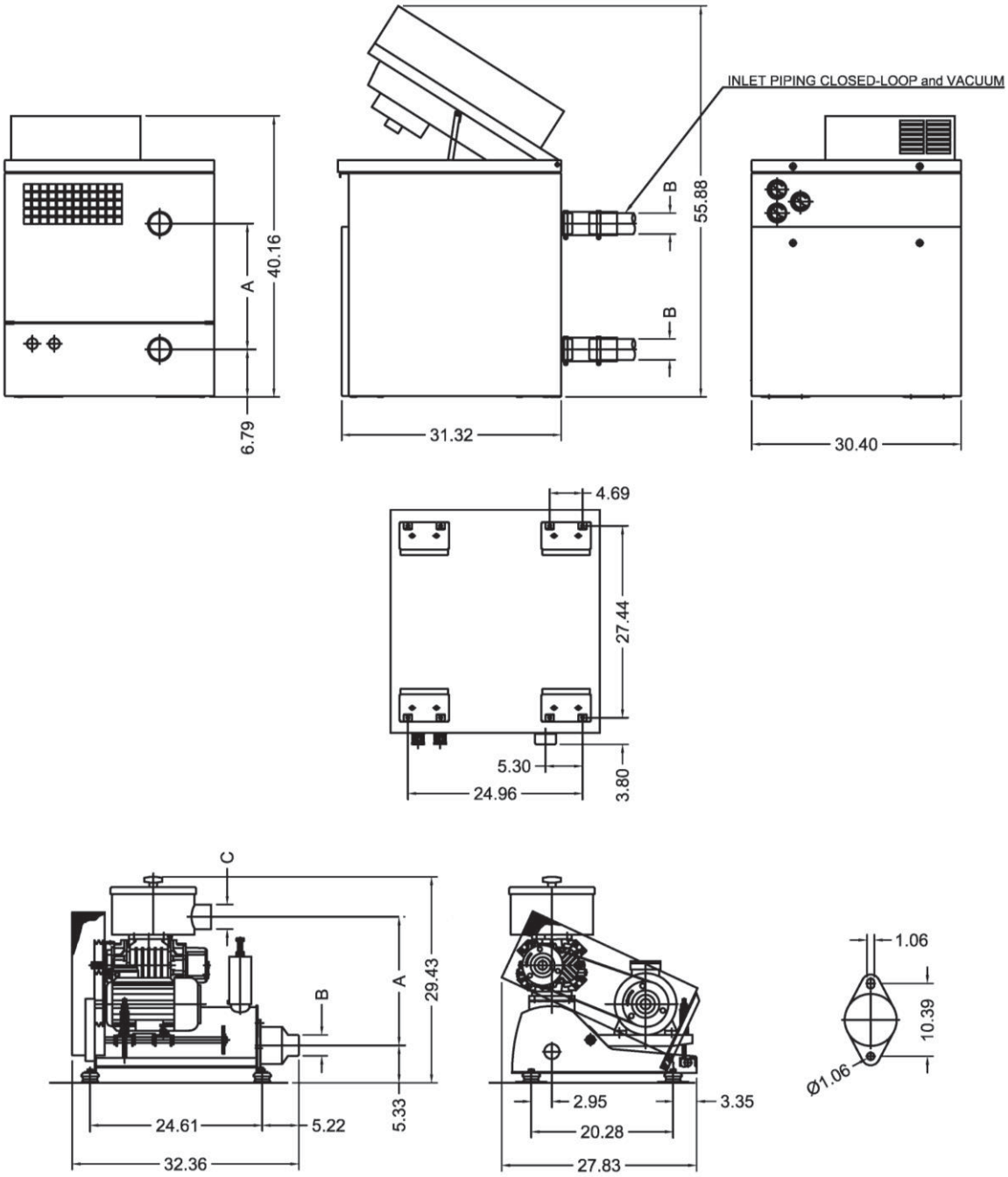

All Dimensions in Inches

FRAME SIZE	A	DN	B	C	WEIGHT (Lbs)
1	18.00	65	3.00	3.00	176.37

NOTICE
Weight is without motor.

FIGURE-2.8

FRAME-2 BLOWER PACKAGES, UNENCLOSED and ENCLOSED, PRESSURE, CLOSED-LOOP and VACUUM OVERALL DIMENSIONS

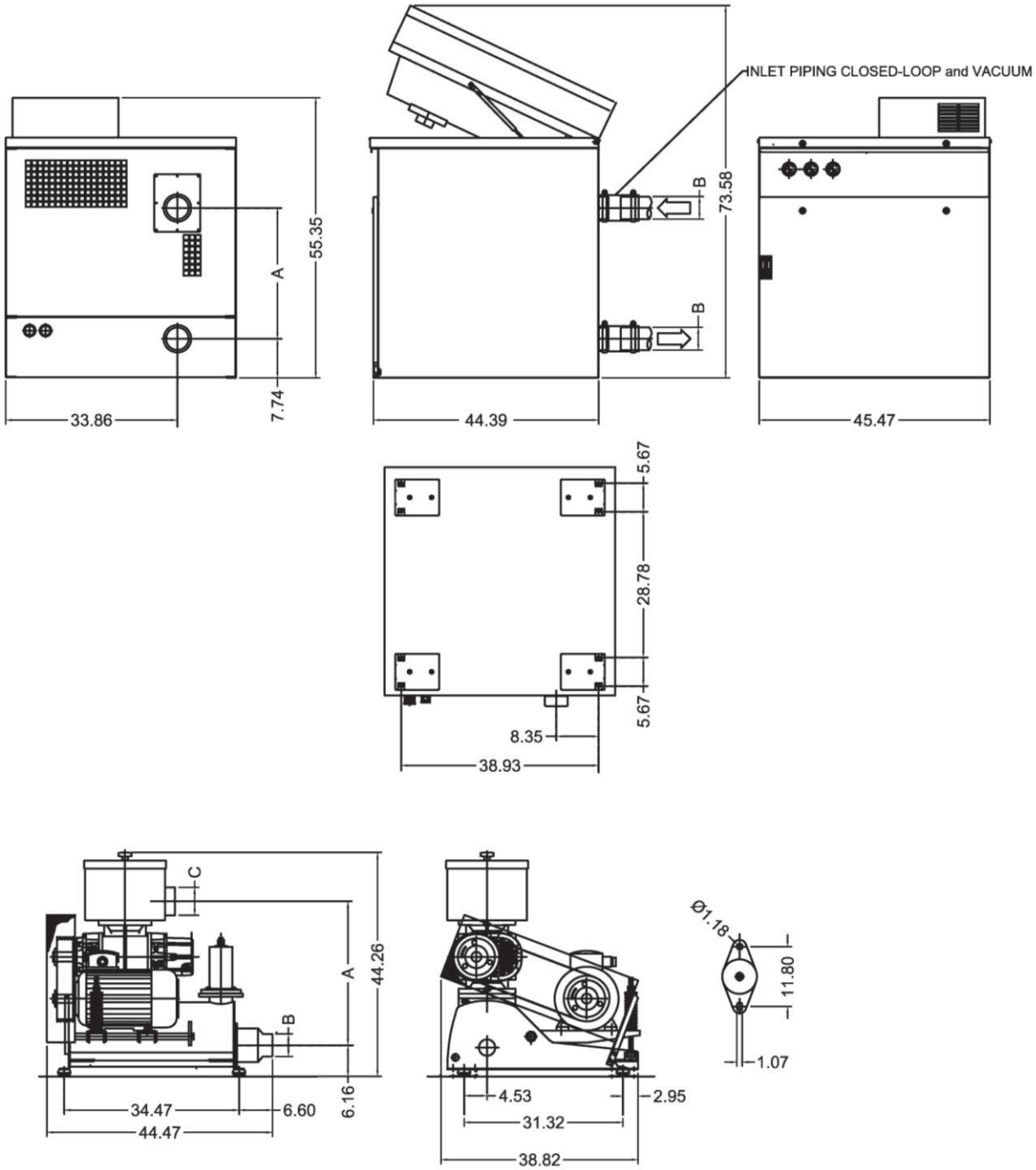

All Dimensions in Inches

FRAME SIZE	A	DN	B	C	WEIGHT(Lbs) UNENCLOSED	WEIGHT(Lbs) ENCLOSED
2	25.87	100	4.50	4.50	672.41	1014.13

NOTICE
Weight is without motor.

FIGURE-2.9

FRAME-3 BLOWER PACKAGES, UNENCLOSED and ENCLOSED, PRESSURE, CLOSED-LOOP and VACUUM OVERALL DIMENSIONS

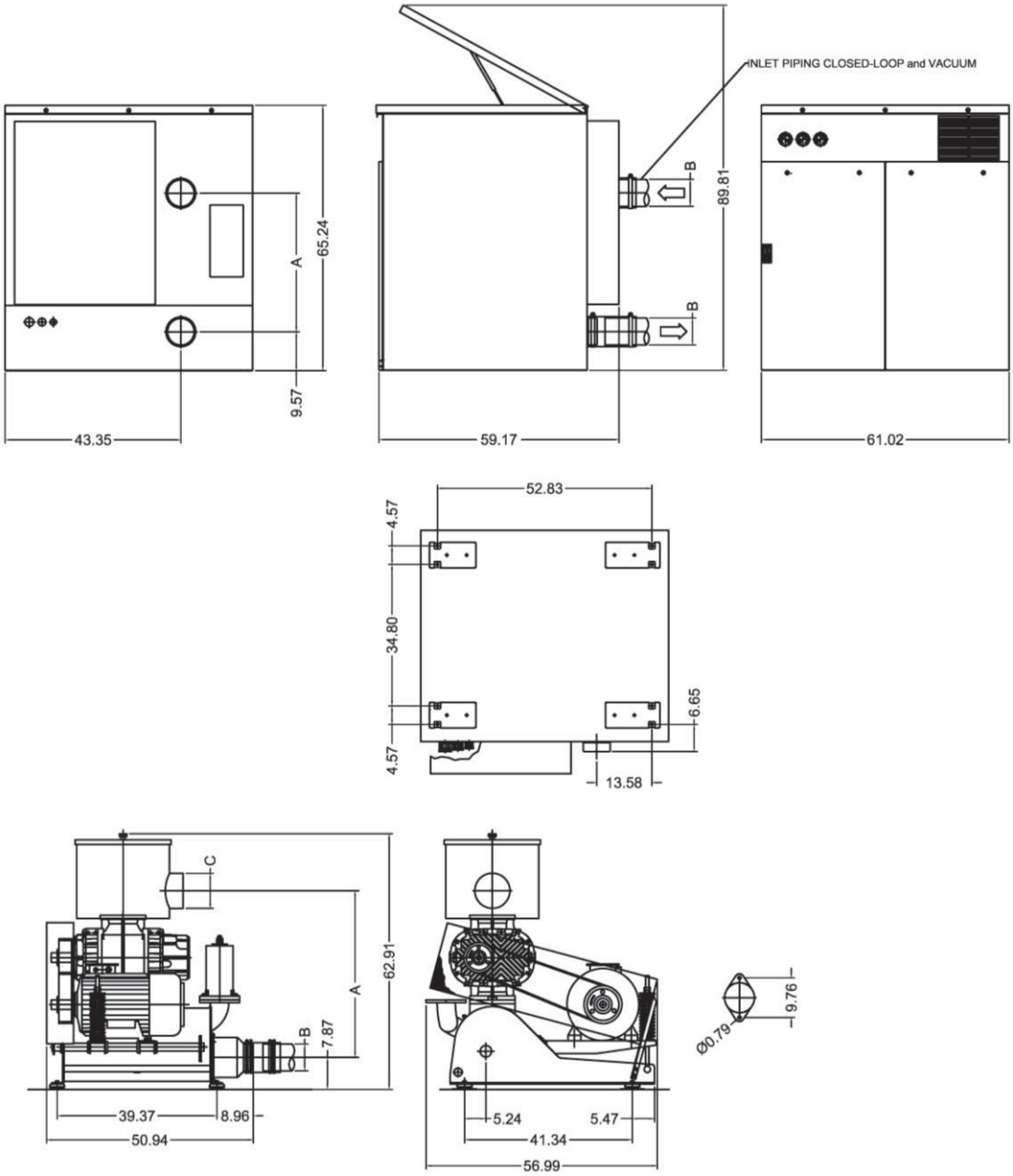

All Dimensions in Inches

FRAME SIZE & TYPE	MODEL	A	DN	B	C	WEIGHT (Lbs.) UNENCLOSED	WEIGHT (Lbs.) ENCLOSED
3 PRESSURE	RBS65 THRU 95	34.09	150	6.62	N/A	1399.94	2116.44
			200	N/A	8.62		
3 CLOSED-LOOP	RBS65 THRU 95	34.09	150	6.62	N/A		
3 VACUUM	RBS66	34.09	150	6.62	N/A		
	RBS75 THRU 86	37.24	150	6.62	N/A		
	RBS95	40.39	150	6.62	N/A		

NOTICE
Weight is without motor.

FIGURE-2.10

FRAME-4 BLOWER PACKAGES, UNENCLOSED and ENCLOSED, PRESSURE, CLOSED-LOOP and VACUUM OVERALL DIMENSIONS

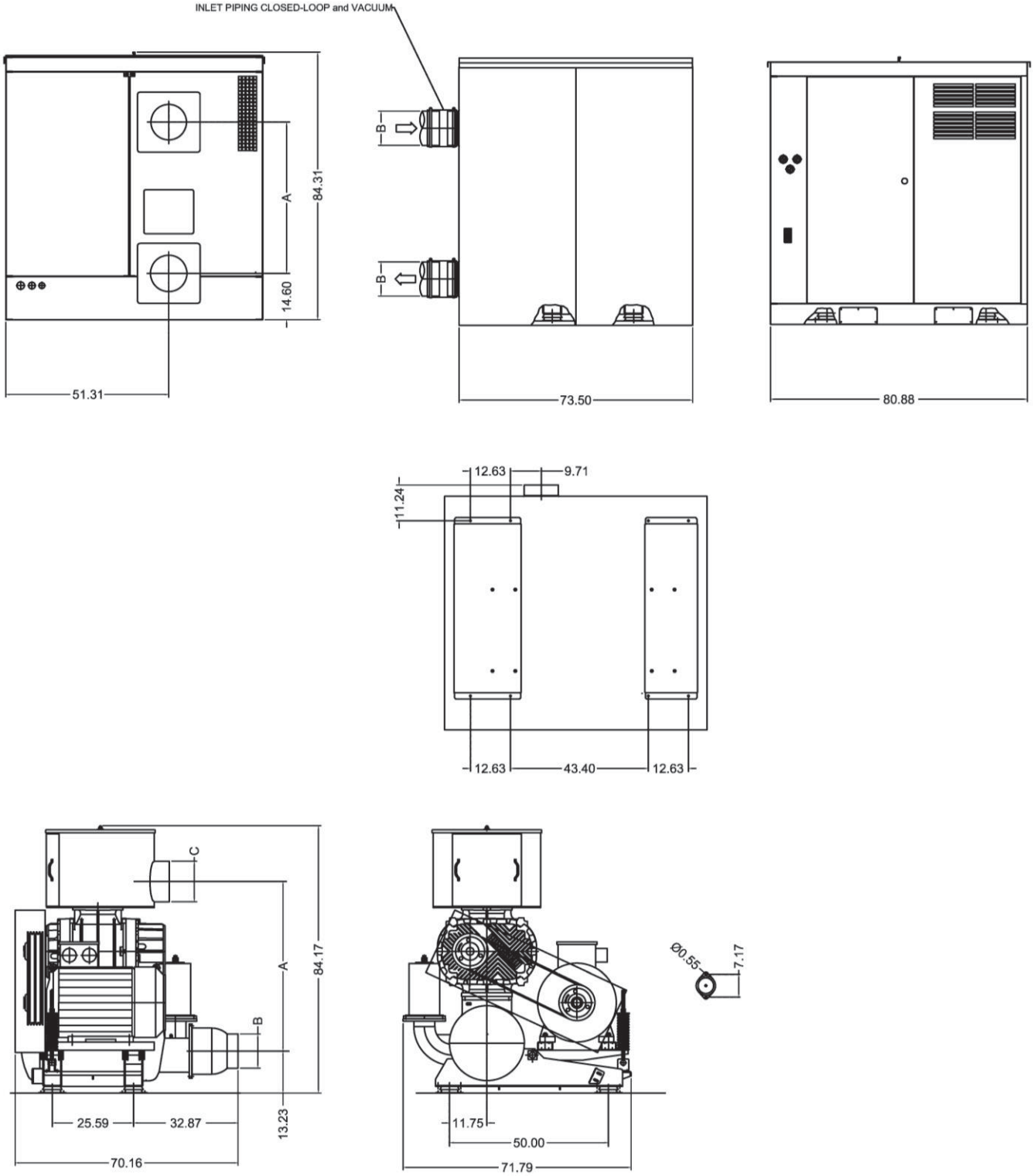

NOTICE
Weight is without motor.

All Dimensions in Inches

FIGURE-2.11

FRAME-4 BLOWER PACKAGES, UNENCLOSED and ENCLOSED, PRESSURE, CLOSED-LOOP and VACUUM OVERALL DIMENSIONS (Continued)

All Dimensions in Inches

FRAME SIZE & TYPE	MODEL	A	DN	B	C	WEIGHT (Lbs.) UNENCLOSED	WEIGHT (Lbs.) ENCLOSED
4 PRESSURE	RBS86 & 115	47.56	200	6.62	N/A	3593.54	4828.12
			300	N/A	12.75		
	RBS105 & 106	45.95	200	6.62	N/A		
			300	N/A	12.75		
	RBS125 & 106	48.66	250	10.75	N/A		
			300	N/A	12.75		
	RBS135	53.39	250	10.75	N/A		
			300	N/A	12.75		
4 CLOSED-LOOP	RBS65 THRU 95	42.83	200	6.62	N/A		
	RBS125 THRU 135	47.40	250	10.75	N/A		
4 VACUUM	RBS86 & 115	47.56	200	8.62	N/A		
	RBS105 & 106	44.80	200	8.62	N/A		
	RBS125 & 106	47.40	250	10.75	N/A		
	RBS135	52.13	250	10.75	N/A		

NOTICE
Weight is without motor.

FRAME-5 BLOWER PACKAGES, UNENCLOSED and ENCLOSED, PRESSURE, CLOSED-LOOP and VACUUM OVERALL DIMENSIONS

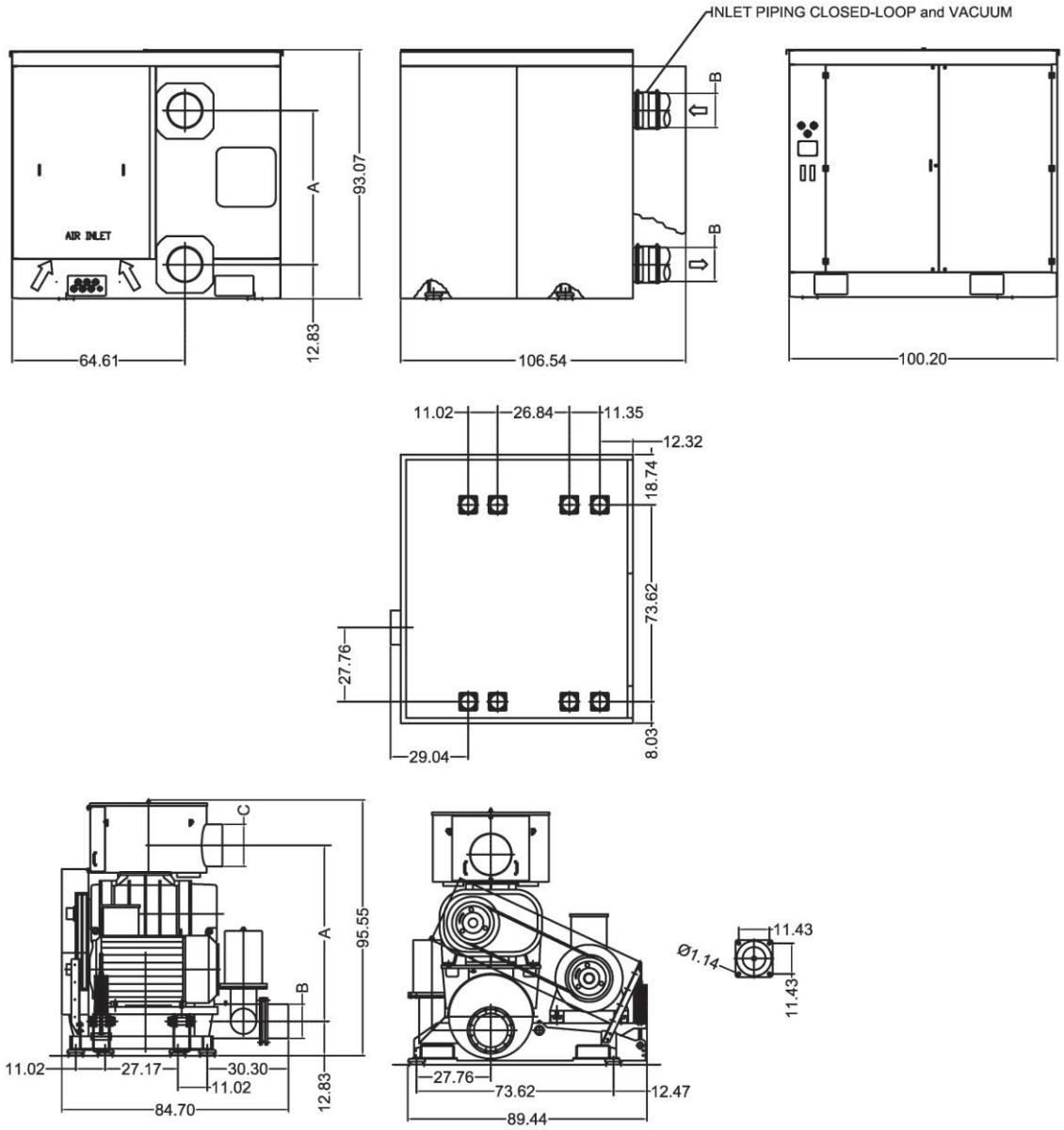

All Dimensions in Inches

FRAME SIZE & TYPE	MODEL	A	DN	B	C	WEIGHT (Lbs.) UNENCLOSED	WEIGHT (Lbs.) ENCLOSED
5 PRESSURE	RBS 126	58.00	300	12.75	15.75	5599.74	6944.56
	RBS145	62.28					
	RBS155	62.68					
	RBS165	65.75					
5 CLOSED-LOOP/VACUUM	RBS126	57.56	300	12.75	N/A		
	RBS145 & 155	62.28					
	RBS165	65.35					

NOTICE
Weight is without motor.

FIGURE-2.12

ELECTRICAL WIRING DIAGRAM – FAN CONTROLLER

TEN011092 Rev.03
(REF. Drawing)

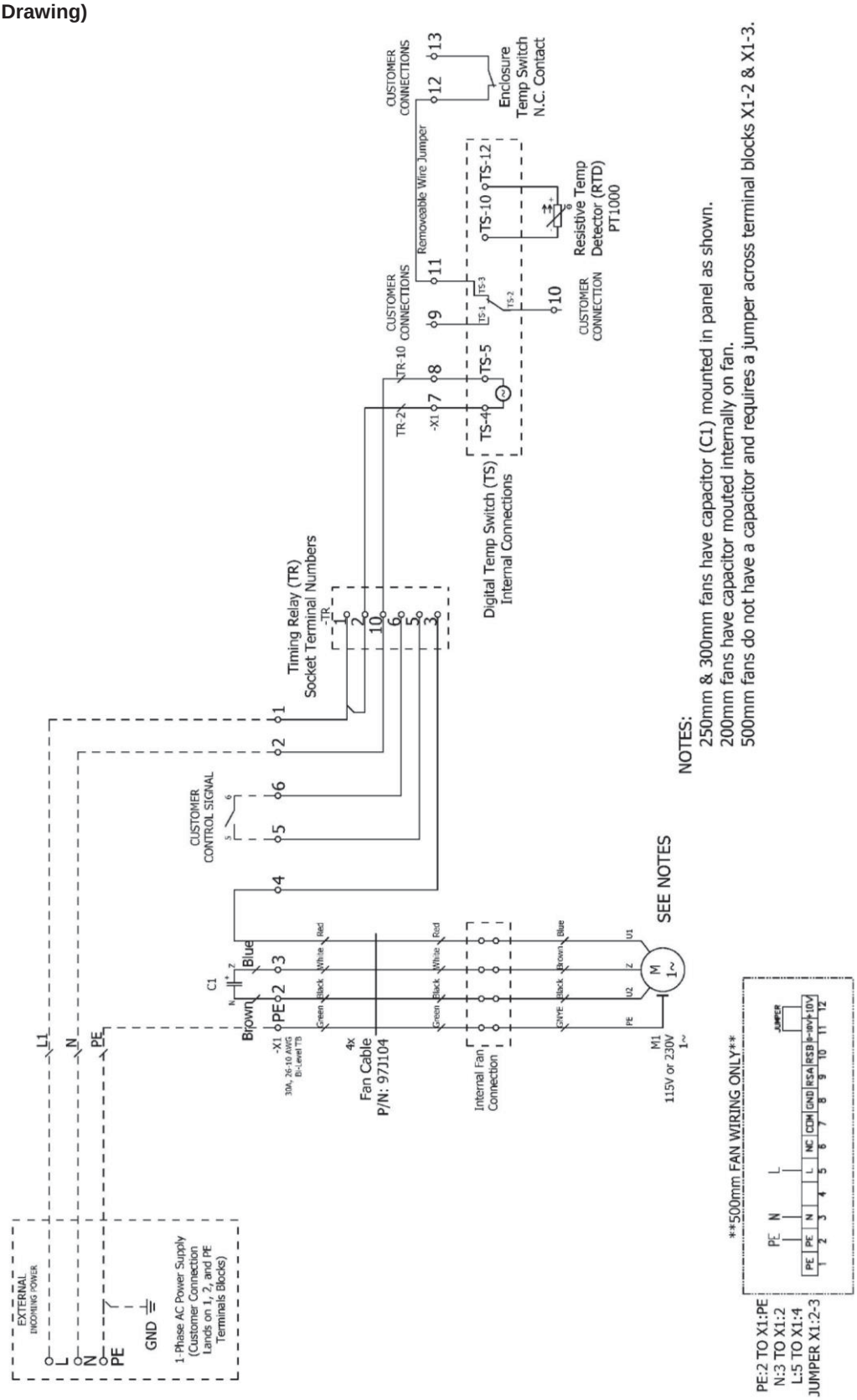

FIGURE-2.13

ESTIMATED 60Hz. BLOWER DRIVE MOTOR FULL CURRENT RATINGS
3 thru 500 HP Blower Packages

200 VOLT, 60 HZ		
HP	Input Voltage	Motor AMPS (Estimated)
3	200	11
5	200	17.5
7.5	200	25.3
10	200	32.2
15	200	48.3
20	200	62.1
25	200	78.2
30	200	92
40	200	120
50	200	150
60	200	177
75	200	221
100	200	285
125	200	359
150	200	414
200	200	552

230 VOLT, 60 HZ		
HP	Input Voltage	Motor AMPS (Estimated)
3	230	10.6
5	230	16.7
7.5	230	24.2
10	230	30.8
15	230	46.2
20	230	59.4
25	230	74.8
30	230	88
40	230	114
50	230	143
60	230	169
75	230	211
100	230	273
125	230	343
150	230	396
200	230	528

460 VOLT, 60 HZ		
HP	Input Voltage	Motor AMPS (Estimated)
3	460	4.8
5	460	7.6
7.5	460	11
10	460	14
15	460	21
20	460	27
25	460	34
30	460	40
40	460	52
50	460	65
60	460	77
75	460	96
100	460	124
125	460	156
150	460	180
200	460	240
250	460	302
300	460	361
350	460	414
400	460	477
450	460	515
500	460	590

575 VOLT, 60 HZ		
HP	Input Voltage	Motor AMPS (Estimated)
3	575	3.9
5	575	6.1
7.5	575	9
10	575	11
15	575	17
20	575	22
25	575	27
30	575	32
40	575	41
50	575	52
60	575	62
75	575	77
100	575	99
125	575	125
150	575	144
200	575	192
250	575	242
300	575	2898
350	575	336
400	575	382
450	575	412
500	575	472

NOTE: Estimated motor amperage is based on 2014 National Electrical Code (NEC) Table 430.250 (Three-Phase Alternating-Current Motors). No corrections have been performed on these estimates for blower package supply wire sizing which must be based on applicable minimum NEC and UL-508A requirements.

FIGURE-2.14 ESTIMATED BLOWER DRIVE MOTOR FULL CURRENT RATINGS

ELECTRICAL (cont'd)

ESTIMATED 50Hz. BLOWER DRIVE MOTOR FULL CURRENT RATINGS
3 thru 200 HP Blower Packages

380 VOLT, 50 HZ		
HP	Input Voltage	Motor AMPS (Estimated)
3	380	5.5
5	380	8
7.5	380	12
10	380	16
15	380	23
20	380	312
25	380	39
30	380	43
40	380	57
50	380	75
60	380	86
75	380	105
100	380	138
125	380	170
150	380	205
200	380	200

415 VOLT, 50 HZ		
HP	Input Voltage	Motor AMPS (Estimated)
3	415	5
5	415	8
7.5	415	11
10	415	15
15	415	22
20	415	28
25	415	36
30	415	39
40	415	52
50	415	69
60	415	79
75	415	96
100	415	100
125	415	125
150	415	150
200	415	255

NOTE: Estimated motor amperage for Three-Phase Alternating-Current Motors. No corrections have been performed on these estimates for blower package supply wire sizing which must be based on applicable minimum NEC and UL-508A requirements.

FIGURE-2.15 ESTIMATED BLOWER DRIVE MOTOR FULL CURRENT RATINGSESTIMATED (cont'd)

ESTIMATED FAN MOTOR AND CONTROL BOX – ESTIMATED AMPERAGE

Package Frame Size	Fan Size	Input Voltage (Hz.)	AMP. Draw
1	200mm	115V (60Hz.)	0.70
	200mm	230V (60Hz.)	0.80
	200mm	230V (50Hz.)	0.64
2	250mm	115V (60Hz.)	1.47
	250mm	230V (60Hz.)	0.70
	250mm	230V (50Hz.)	0.51
3 and 4	300mm	115V (60Hz.)	3.22
	300mm	230V (60Hz.)	1.56
	300mm	230V (50Hz.)	1.10
5	500mm	230V (50/60Hz.)	2.20

Estimated amperage is based on control box power supply input amperage and fan motor nameplate full load amperage. No corrections have been performed on these estimates for blower control box supply wire sizing which must be based on applicable NEC and UL-508A requirements.

FIGURE 2.16 – FAN MOTOR AND CONTROL BOX – ESTIMATED AMPERAGE

SECTION 3
OPERATION

Future operating problems can be avoided if proper precautions are observed when the equipment is first put into service.

Before starting under power, the blower should be turned over by hand to make certain there is no binding, or internal contact.

Each size blower has limits on pressure differential, running speed, temperature rise, and discharge temperature which must not be exceeded.

WARNING
Operating beyond the specified operating limitations will result in damage to the unit.

It is important that the pressures and temperatures are measured directly at the ports of the blower to avoid error that may be caused by intervening pipe runs, fittings, etc.

Relief valves are supplied to protect against excessive pressure or vacuum conditions. These valves should be tested at initial startup to be sure they are adjusted to relieve at or below the maximum pressure differential rating of the blower. Refer to pages 34 and 35 for details.

In some instances, pressure may be relieved at a lower point than the blower maximum in order to protect the motor or the equipment by the blower.

Discharge temperature switches are required to protect against excessive inlet restriction or inlet temperatures. Blower damaged caused by failure to wire the fan controller to the drive motor starter or VFD will void the blower warranty.

Check valves are installed at the factory in the discharge line on pressure blowers and in the inlet line on vacuum blowers to protect the blower from motoring backwards when shut down under load.

For enclosed packages, always operate the package with the panels closed for optimum cooling and noise control. Operating with panels removed will cause over heating and excess noise levels.

NOTICE
Blower speed, line losses, elevation, and increased inlet temperatures will affect the maximum operating limitations.

PIPING

Inlet and discharge connections on all blowers are large enough to handle maximum volume with minimum friction loss. Reducing the pipe diameter on either inlet or discharge for a vacuum or pressure package will only create additional line loss and increase the overall pressure differential.

Excessive weight and thermal expansion of piping and fittings will cause internal misalignment and premature wear. Never allow the blower package to carry the weight of the pipe. A spool or sleeve-type expansion joint must be installed between the unit and the piping. Where a flexible connection is not possible, the weight of the rigid connection must be separately supported. All system piping must be cleaned internally before connecting the blower.

⚠ CAUTION

Blower, discharge silencer and all piping and tubing may be at high temperature during and after operation.

LUBRICATION

⚠ WARNING

The blowers are shipped dry from the factory. Do not attempt to operate the blower before following proper lubrication instructions. Permanent damage to the gears, bearings and seals will occur.

Gardner Denver manufactures many different sizes of positive displacement blowers. Please refer to Section-4 OIL CHANGE for proper lubricating instructions. For the enclosed package, the lubricant is filled through fill hoses on the left hand side under the top hinged cover. The packages are furnished with the first fill of AEON PD XD Lubricant.

AIR FILTERS AND FILTER SILENCERS

Servicing frequency of filter elements is not time predictable. A differential pressure indicator, with a continuous gauge reading is supplied on pressure packages. The pressure indicator will tell how much of the service life of the filter element has been used. It will also eliminate both premature filter servicing and premature blower failure due to a plugged filter when the filter pressure drop is used to establish maintenance points. Change inlet filter elements @ 10 in – H_2O differential pressure.

⚠ WARNING

Servicing the air filters is one of the most important maintenance operations to be performed to insure long blower life.

PERFORMANCE LIMITS AND WORKING CONDITIONS

Operating Environments

Your blower package is suitable to operate only in a dust free environment with non-explosive or corrosive atmosphere of air or nitrogen.

WARNING

WARNING: Your blower package is not suitable to operate in ambient conditions with explosive, toxic or dangerous gases.

WARNING: Your blower package is not suitable to ingest liquids into the intake. Severe damage will occur.

Performance Limits

FRAME SIZE	Blower	RPM		P1 [psi]		P2-P1 [psi]	P2/P1	T1 [°F]		T2 [°F]	T2-T1 [°F]
		MAX	MIN(1)	MAX	MIN	MAX	MAX	MIN	MAX	MAX	MAX
1	15	5000	1200	P0+0.73	P0-7.25	13.05	2	-13	122	266	230
	25					10.15					194
2	35	4800	1000	P0+1.45	P0-7.25	14.50	2	-13	122	302	266
	45					14.50					230
	46					10.15					194
	55	4800	900			14.50					266
	65					14.50					230
	66	3900				10.15					194
3	66	4800	900	P0+1.45	P0-7.25	10.15	2	-13	122	302	194
	75	3800	700			14.50				302 (2)	266
	85					14.50					230
	86	3000				10.15					194
	95		550			14.50					266
4	86	3800	700	P0+1.45	P0-7.25	10.15	2	-13	122	302 (2)	194
	105	3000	550			14.50					230
	106					10.15					194
	115	2400	450			14.50					266
	125					14.50					230
	126	1800				10.15					194
	135		350			14.50					266
5	126	2400	450	P0+1.45	P0-7.25	10.15	2	-13	122	302 (2)	194
	145	1800	350			14.50					230
	155					10.15					194
	165	1500	300			14.50					266

FIGURE-3.0

Po Atmospheric pressure

P1 Blower inlet absolute pressure — T1 Blower inlet temperature

P2 Blower outlet absolute pressure — T2 Blower outlet temperature

1. Resonance phenomena in the plant is possible when speed of rotation is close to the minimum.
2. 320°F for blowers /R-F.
3. Discharge temperature switches are strongly recommended to protect against excessive inlet restriction and inlet temperatures.

Forbidden Uses

Forbidden Use	Risk	Measures
Operation in explosive atmosphere	Fire and explosion	**Forbidden Uses**
Suction of explosive gases		
Suction of toxic and dangerous gases	Environment pollution Risk of operators health	
Operation with shut off valve locked	Overheating Fire Blower stall and ejection of parts	
Operation with noise hood fan motor not working	Overheating Fire Blower stall and ejection of parts	
Suction of liquids	Blower stall and ejection of parts	Install a liquid separator on the suction nozzle of the blower
Operation with wrong direction of rotation	Ejection of dangerous substances Blower stall and ejection of parts	Inform the qualified personnel charged with the blower package
Operation with speed higher than the maximum one	Blower stall and ejection of parts	Use suitable limits to the motor speed when it is supplied with frequency converter
Operation with speed lower than the minimum one		
Operation with pressure (P1) higher than the maximum one	Ejection of dangerous substances	Inform the qualified personnel charged with the blower package
Operation with pressure (P1) lower than the minimum one	Blower stall and ejection of parts	
Operation with pressure (P2-P1) higher than the maximum one	Blower stall and ejection of parts	
Operation with pressure ratio (P2/P1) higher than 2	Overheating Fire Blower stall and ejection of parts	
Operation with temperature (T1) higher than the maximum one		
Operation with temperature (T1) lower than the minimum one	Blower stall and ejection of parts	
Operation with temperature (T2) higher than the maximum one	Overheating Fire Blower stall and ejection of parts	
Operation with temperature (T2-T1) higher than the maximum one	Blower stall and ejection of parts	

RESIDUAL RISK

Hazard **UNI EN 1012-1 Compressor**	**Residual risk**	
	ENCLOSED PACKAGES	**UNENCLOSED PACKAGES**
Cutting, severing, drawing in, trapping, entanglement, friction and abrasion	None with sound hood closed. With open sound hood see UNENCLOSED PACKAGES column.	Do not approach the transmission guard and SPF nozzle with no suitable clothes. Advice in the manual.
Fluid ejection	Discharge of relief valve Label C.9 on the sound hood Advice in the manual	Discharge of relief valve Label C.9 on the valve body Advice in the manual
Ejection of parts	None with sound hood closed. With open sound hood see UNENCLOSED PACKAGES column.	Overcoming the operation limits can cause the risk of ejection of parts.
Loss of stability	None	
Electric installation	None only for the principal motor supplied directly by Gardner Denver Inc. and for the fan motor.	None only for the principal motor supplied directly by Gardner Denver Inc.
Electrostatic phenomena		
External influences on electrical equipment		
Thermal safety	None with sound hood closed. With open sound hood see UNENCLOSED PACKAGES column.	The surface of the blower and of the discharge silencer can be higher than 158 °F. Label C.7 on the surfaces Advice in the manual
Noise	None with sound hood closed. With open sound hood see UNENCLOSED PACKAGES column.	The sound pressure level can be higher than 85 dB (A). Wear the noise protection devices Label C.2 on the inlet filter Advice in the manual
Suction of liquids	Forbidden use can cause the risk of suction of liquids.	
Gas	Forbidden use can cause the risk of suction of dangerous gases.	
Fire and explosion	Overcoming the operation limits can cause the risk of fire and explosion. Operation with shut-off valve locked can produce the risk of fire. Improper maintenance can cause the overheating and the risk of fire.	
Failure of energy supply	None	

PACKAGE STARTUP CHECKLIST

This startup procedure should be followed during the initial installation and after any shutdown periods or after the blower has been worked on or moved to a new location. It is suggested that the steps be followed in sequence and checked off ☑ in the boxes provided.

- ☐ 1. Complete the Blower Startup Checklist provided in this manual (see pages 32 and 33).
- ☐ 2. Remove all packing material.
- ☐ 3. Ensure the placement of the package follows the illustration provided.
- ☐ 4. Ensure the motor is installed correctly and wiring is done correctly by certified electrician.
- ☐ 5. Activate belt tensioner.
- ☐ 6. All piping connected to the blower is fastened correctly without any weight load exerted on the package.
- ☐ 7. Ensure no debris is obstructing the piping and blower. Debris that is suctioned into the blower can cause blower failure.
- ☐ 8. Jog motor to check that rotation is in proper direction, and to be certain motor and blower turn freely and smoothly. Refer to rotation arrow on blower side of belt guard.

Gardner Denver

Blower Start-Up Checklist Page 1

Service Center Technician

Must Be Completed, Signed, and Sent to krista.tierney@gardnerdenver.com

Form IQ-5-122

Gardner Denver 1800 Gardner Expressway Quincy,IL 62301 217-222-5400

CUSTOMER				DATE	
PHONE #				P.O. #	
CONTACT				START-UP DATE	
ADDRESS					
MODEL/SIZE		BARE SERIAL #		PKG. SERIAL #	
PKG VOLTAGE/Hz		MOTOR HP/kW/RPM		MOTOR I.D. #	
MOTOR MFR./FRAME		MOTOR NP ø/Volts/Hz		MOTOR NP AMP	
VFD CATALOG #		VFD SERIAL #		VFD ø/Volts/Hz	
VFD MOTOR kW/HP		VFD INPUT Amps		LINE REACTOR MODEL #	

Package		Line Power		LESS STARTER	
☐ NAMEPLATE		☐ LINE VOLTAGE		☐ MCC/STARTER TYPE	
☐ INLET FILTER		☐ LINE AMPERAGE		☐ MCC/STARTER VENDOR	
☐ ENCLOSURE PANELS		☐ LINE WIRE SIZE		☐ MCC /STARTER SIZE	
☐ HI VOLT TERM BLOCKS		☐ # LINE CONDUCTORS		☐ MCC /STARTER O/L TYPE	
☐ LO VOLT TERM. BLOCKS		☐ GRND WIRE SIZE		☐ STARTER O/L SET POINT	
☐ FUSES		☐ # GRND CONDUCTORS		☐ STARTER CONTROL VOLTS	
☐ SHIPPING BLOCKS		☐ LINE REACTOR		☐ OTHER	
☐ BELT TENSION LOCK		☐ DISCONNECT TYPE			
☐ BLOWER LUBE		☐ DISCONNECT AMP			
☐ SILENCER		☐ OTHER			
☐ UNLOADER VALVE					

System/Process & Control		System Piping		Equipment Room	
☐ SYSTEM TYPE		☐ INLET PIPE DIA.		☐ AMBIENT PRESSURE	
☐ PROCESS TYPE		☐ INLET PIPE LENGTH		☐ AMBIENT TEMP	
☐ SYSTEM CONTROL		☐ # INLET PIPE VALVE's		☐ CONTAMINATES	
☐ PROCESS CONTROL		☐ # INLET PIPE EL's		☐ VENTILATION	
☐ PROCESS CYCLE ON		☐ DISCH PIPE DIA.		☐ PERIMETER CLEARANCE	
☐ PROCESS CYCLE OFF		☐ DISCH PIPE LENGTH		☐ FOUNDATION	
☐ FLOW CONTROL TYPE		☐ # DISCH PIPE VALVE's		☐ GROUT	
☐ PRESS. CONTROL TYPE		☐ # DISCH PIPE EL's		☐ LEVEL	
☐ OTHER		☐ OTHER		☐ SOFT FOOT	
				☐ ANCHORS	
				☐ OTHER	

NOTES

CUSTOMER ACCEPTANCE: ☐ O&M MANUALS ☐ OPERATION ☐ MAINTENANCE ☐ SAFETY /PROTECTIVE DEVICES

CLIENT		TITLE		DATE	
TECHNICIAN		TITLE		DATE	

Gardner Denver

Blower Start-Up Checklist Page 2

Service Center Technician

Must Be Completed, Signed, and Sent to krista.tierney@gardnerdenver.com Form IQ-5-123

Gardner Denver 1800 Gardner Expressway Quincy,IL 62301 217-222-5400

CUSTOMER				DATE	
PHONE #				P.O. #	
CONTACT				START-UP DATE	
ADDRESS					
MODEL/SIZE		BARE SERIAL #		PKG. SERIAL #	
PKG VOLTAGE/Hz		MOTOR HP/kW/RPM		MOTOR I.D. #	
MOTOR MFR./FRAME		MOTOR NP ø/Volts/Hz		MOTOR NP AMP	
VFD CATALOG #		VFD SERIAL #		VFD ø/Volts/Hz	
VFD MOTOR kW/HP		VFD INPUT Amps		LINE REACTOR MODEL #	

OPERATING PARAMETERS

Power		Pressure		Safety Shutdown /Set Point	
☐ LINE AMPERAGE		☐ AMBIENT PRESSURE		☐ E-STOP TEST	
☐ LINE VOLTAGE		☐ INLET PRESSURE		☐ DISCHARGE TEMP.	
☐ A ph AMPERAGE		☐ DISCHARGE PRESSURE		☐ INLET TEMP.	
☐ A-B VOLTAGE		☐ INLET/DISCHARGE ΔP		☐ LUBE TEMP	
☐ B ph AMPERAGE		☐ LOAD CYCLE		☐ "PRV" SETPOINT	
☐ B-C VOLTAGE		☐ UNLOAD CYCLE		☐ INLET PRESSURE	
☐ C ph AMPERAGE		☐ INLET FILTER Δ		☐ DISCHARGE PRESSURE	
☐ C-A VOLTAGE		☐ DISCHARGE SILENCER Δ		☐ OTHER	
☐ GRND AMPERAGE					

Controller Operational Menu ** if supplied with factory installed controller***

Maintenance Info		Pressures & Temperatures		VFD Motor Information	
☐ TOTAL HOURS		☐ INLET PRESSURE		☐ V1 FRQ CMD	
☐ AIR FILTER INT.		☐ INLET TEMP		☐ MTR FRQ	
☐ OIL CHANGE INT.		☐ DISCHARGE TEMP		☐ MTR CURRENT	
☐ CBOX FILTER INT.		☐ DIFF. TEMP		☐ MTR POWER	
☐ MTR LUBE INT		☐ DIFF PRESS		☐ MTR VOLTAGE	
☐ START TIMER		☐ DISCH PRESS		☐ MTR SPEED	
☐ STOP TIMER		☐ OIL TEMP 1		☐ BLW SPEED	
☐ ASC SW Version		☐ OIL TEMP 2		☐ V1 DC VOLT	
☐ CMT SW Version		☐ OIL LEVEL 1		☐ V1 TEMP	
☐ CLT SW Version		☐ OIL LEVEL 2		☐ DRIVE FAULT	
☐ ACM SW Version		☐ SYSTEM PRESS		☐ V1 Version	
☐ DATE & TIME					

Service Advisory History					Shutdown Advisory History				
Code	Hours	In Temp	Disch Temp	Disch Press	Code	Hours	In Temp	Disch Temp	Disch Press

CUSTOMER ACCEPTANCE: ☐ O&M MANUALS ☐ OPERATION ☐ MAINTENANCE ☐ SAFETY /PROTECTIVE DEVICES

CLIENT		TITLE		DATE	
TECHNICIAN		TITLE		DATE	

Operation

Operation Checklist Schedule

FIGURE-3.1

CHECK	PARAMETER	FREQUENCY				NOTE
		Hours	Days	Week	Months	
OPERATION CONDITIONS	Differential pressure		1			package in operation
	Absorbed power		1			
	Cooling liquid flow		1			
LUBRICATION	Oil level		1			package out of operation
	Oil Leakage			1		
	Oil change	4000			6	
	Motor bearing re-greasing					
FILTER	Vacuum		1			< 0.5 psi
	Clogging				2	> 0.87 psi
TRANSMISSION	Wear	2000				package out of operation
	Belt tension	2000				
	Belt change	15000			24	

Note: In case of double indication follow the most limiting one for the application.

Relief Valve Setting

- Enclosed Blower Packages, remove the access panel located on the rear panel of the cabinet.

WARNING

- **When setting the valve don't get fingers or other objects between turns of the spring. Injuries can occur and obstruct proper operation of the valve.**
- **Do not approach opening of SPF silencer with clothes or other elements which could be sucked inside the pipe.**

Pressure Operation /P and /C (RVP valve)

- Completely load the spring by screwing down the nut **E**.
- Throttle outlet flow of the blower package to reach the rated outlet pressure.
- Unscrew the nut **E** until the valve begins to open.
- Screw the nut **E** one turn and lock it with the lock nut.
- Air discharging from the valve is hot and will cause severe burns.
- Position the rear panel of the noise hood.
- Position the access panel on the rear of the noise hood.

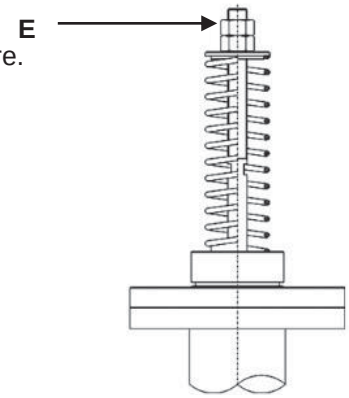

FIGURE-3.2

Pressure Operation /P (VSM /P valve)

- Set the valve closing time at 10-15 seconds by screwing nut **A**.

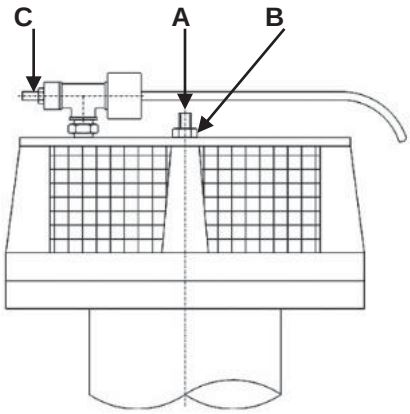

FIGURE-3.3

NOTICE
Screwing in nut A reduces time. Unscrewing the nut A increases time.

- After adjusting the time setting, lock nut **A** by using nut **B**.
- Completely load the spring by screwing down nut **C**.
- Throttle outlet flow of blower package to reach the rated outlet pressure.
- Unscrew nut **C** until the valve begins to open.

WARNING
NOTE: Air coming from the valve is hot and will cause severe burns.

- Screw the nut **C** one turn and lock it with the lock nut.
- Enclosed Blower Packages, Frames 2-3 position the rear panel of the noise hood.
- Enclosed Blower Packages, Frames 4-5 position the valve panel on the rear panel of the noise hood.

Vacuum Operation /V (RVV Valve)

- Unloosen nut **D** and completely load the spring by screwing the rod.
- Throttle inlet flow of the blower package to reach the rated inlet pressure. Unscrew the rod until the valve begins to open.
- Screw the rod one turn and lock it with the lock nut **D**.

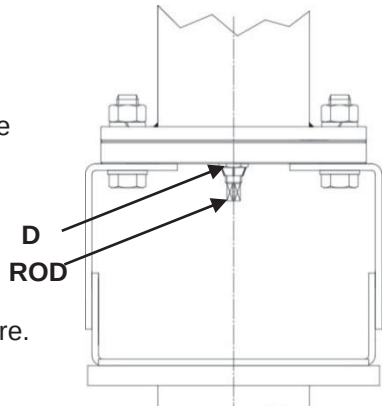

FIGURE-3.4

- Enclosed Vacuum Packages, Re-attach the valve cover panel on the rear panel of the noise hood.

Inlet Silencer Setting

The suction silencer is set before delivery for the working conditions confirmed in order acknowledgement.

Following setting operations are requested only by different working conditions.

NOTICE
For varible speed operation, set the silencer for the lowest speed.

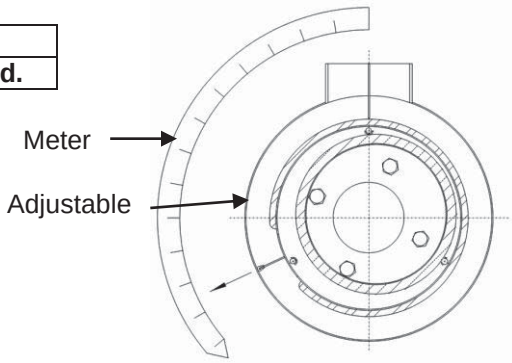

FRAMES 1-2-3

- ES Blower Packages - Open the roof panel using the key.
- Remove the cover knob and remove silencer cover.
- Position adjustable baffle at the new speed referring to the scale inside silencer.
- Position silencer cover.
- Close the roof panel and lock using the key.

FRAMES 4-5

- ES Blower Packages - Open the doors of the noise hood.
- Remove the rear panel of silencer **POS 312**.
- Unloosen locking screw on adjustable baffle **POS 315**.
- Position the adjustable baffle at the new speed referring to the scale inside silencer (see the notch in the detail).
- Fix the adjustable baffle screwing the nut **POS 315**.
- Position the rear panel **POS 312**.
- Close the doors of the noise hood.

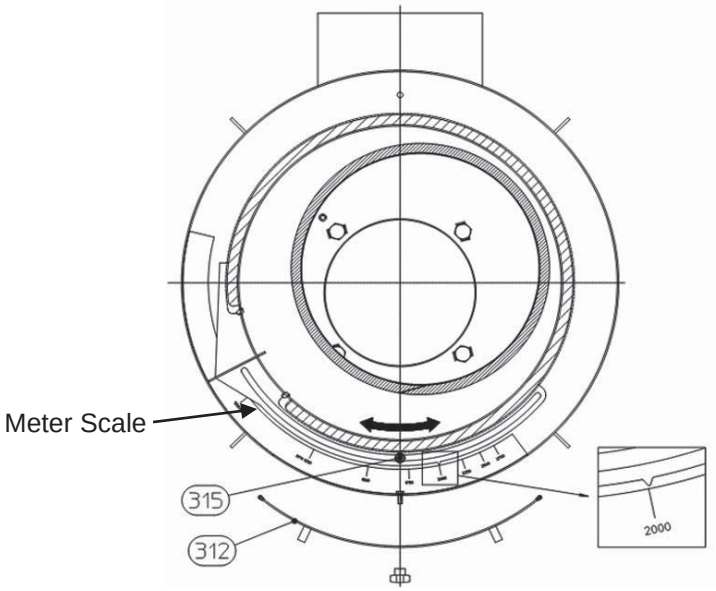

SECTION 4
MAINTENANCE

WARNING
• Stop the blower package and auxiliary system and remove the differential pressure if possible.
• Verify the deceleration of the package is even and without vibration.
• Disconnect the electric supply switch then lock-out and tag-out in the open position. Store the key in a safe location per lock-out and tag-out policy.
• Isolate the blower package from the plant air piping system.
• System air or gas contained in the piping system may be hot and toxic. Wait until the blower package returns to ambient temperature (<104°F) before starting to the service the blower package.

Oil Change

The first oil change must be performed after 500 working hours. For enclosed blower packages, Frames 1, 2, 3 and 4 drain oil using the hose or hoses as indicated in FIGURE-4.0.

For enclosed blower packages, Frame 5, drain oil using the cocks placed behind the front panel as indicated in FIGURE-4.0. Return hose to its original position (See Figure-4.1) after the drain has been completed.

For enclosed blower package, Frame-5, close the taps.

For enclosed blower packages, fill both the oil sumps with new oil (see Figure-4.2 on page-38) for quantity required. Always verify proper lube level at sump cover sight glasses. External level gauge is for reference only.

NOTICE
For enclosed blower packages in all frame sizes, always verify the oil level is at the halfway point on the oil level plugs located on each blower sump (see Figure-4.1). For Frames-1 through 5, always verify the oil level is centered halfway between the MAX and MIN lines on the external oil level indicator located on the front cabinet panel (see FIGURE-4.1). This is for reference only.

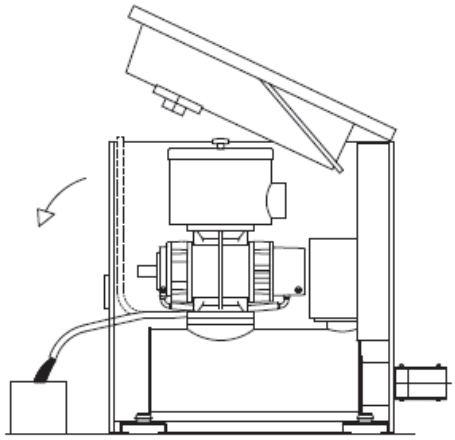

FIGURE-4.0

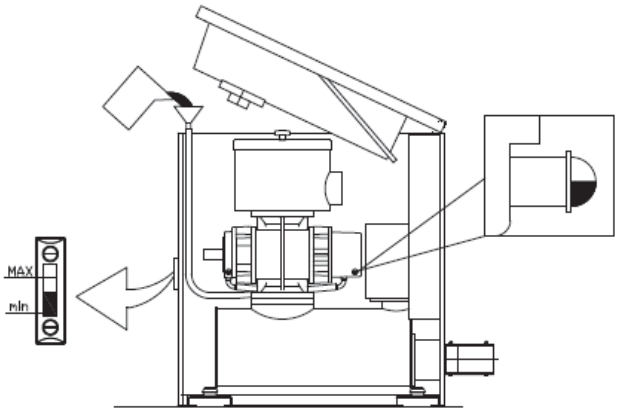

FIGURE-4.1

ROBOX	Blower	Oil Quantity (gallons)		
		Gears side	Drive side	Total
1	15-25	0.11	0.08	0.19
2	35-45-46	0.20	0.11	0.31
	55-65-66	0.32	0.16	0.48
3	65-66	0.48	0.29	0.77
	75-85-86	0.69	0.37	1.06
	95	1.08	0.55	1.64
4	86	1.06	0.42	1.48
	105-106	1.45	0.61	2.06
	115-125-126	1.80	0.92	2.72
	135	3.30	1.77	5.07
5	126	1.80	1.14	2.93
	145-155	3.30	1.98	5.28
	165	5.28	3.04	8.32

FIGURE-4.2

GARDNER DENVER LUBRICANT ORDER INFORMATION

Re-order Part numbers for AEON PD Series Factory-Recommended Synthetic Lubricants.

AEON PD Grade Synthetic Lubricant

Description	Part Number
1 Quart	28G23
1 Gallon	28H40

AEON PD-Food Grade Synthetic Lubricant

Description	Part Number
1 Quart	28H97
1 Gallon	28H333

AEON PD-XD Extreme Duty Synthetic Lubricant

Description	Part Number
1 Quart	28G46
1 Gallon	28G42

AEON PD Grease

Description	Part Number
14 oz. Tube	28H283

Call you local Gardner Denver distributor to place your order for Gardner Denver Lubricants.

AEON PD Series Lubricant is formulated for positive displacement blower service to provide maximum blower protection at any temperature. One fill of AEON PD Series Lubricant will last a minimum of 4 times longer than a premium mineral oil.

		Ambient Temperatures (° F)				
		<10° *	10° to 32° **	32° to 60°	60° to 90°	>90°
Blower Discharge Temperatures (°F)	<32°	AEON PD AEON PD FG	AEON PD AEON PD FG			
	32° to 100°	AEON PD AEON PD FG	AEON PD AEON PD FG	AEON PD AEON PD FG	AEON PD AEON PD FG	
	100° to 200°	AEON PD AEON PD FG	AEON PD AEON PD FG	AEON PD AEON PD FG	AEON PD XD	AEON PD XD
	200° to 300°	AEON PD AEON PD FG	AEON PD AEON PD FG	AEON PD AEON PD FG	AEON PD XD	AEON PD XD
	>300°			AEON PD XD	AEON PD XD	AEON PD XD

* For ambient temperatures less than 10° F, but not less than -20° F, the use of oil sump heaters or heated enclosures is required.

** For ambient temperatures 10° F to 32° F, the use of oil sump heaters or heated enclosures is recommended.

FIGURE-4.3 – SYNTHETIC LUBRICANT TABLE

MOTOR BEARINGS RE-GREASING

Only for the motors provided with the greasing devices DE and NDE (see Figure-4.4) check the motor instructions manual. In default of the specific instruction of the motor manufacturer use the table below for the grease quantity and re-greasing interval in hours of operation.

NEMA FRAME	BEARING	AEON PD Grease g/bearing	3600 rpm	1800 rpm
254/6T	6309 (BALL)	13	20000	25000
284/6T	6311 (BALL)	18	14000	25000
324/6T	6312 (BALL)	21	12000	25000
364/5T	6314 (BALL)	27	4000	12000
404/5T	NU316 (ROLLER)	34	N/A	7000
444/5T 445/7T	NU319 (ROLLER)	45	N/A	5000
447/9T	NU322 (ROLLER)	60	N/A	4000
504/5T	NU319 (ROLLER)	45	N/A	5000
586/7T 588/9T	NU322 (ROLLER)	60	N/A	4000

⚠ CAUTION

Excess grease causes bearing overheating, resulting in bearing failure.

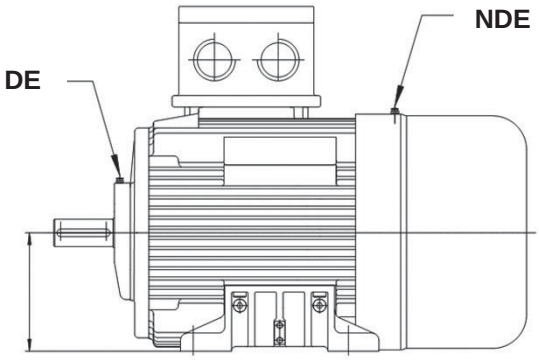

FIGURE-4.4

Check the V-Belt Tension

WARNING
Excessive V-belt tension could damage the blower and the motor. Please refer to Gardner Denver Inc. for details.

Elastic Belt Tensioning Device for V-Belts

Use this solution for groups with extensible belts, such as poly-V, Eagle. When the belt tensioning unit is elastic, a device for transport safety is needed. NOTE: Tension to NEW value, test and possibly re-tension. Record the new and used frequency on the appropriate sticker.

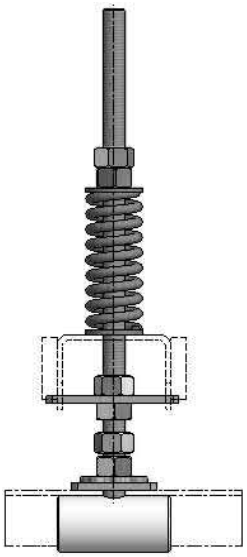

FIGURE 4.5

Fixed Belt Tensioning Device for Synchronous Belts

Use this solution for units with synchronous belts, such as Gates Carbon Volts. When the belt tensioning unit is blocked, it does not require any transport safety device.

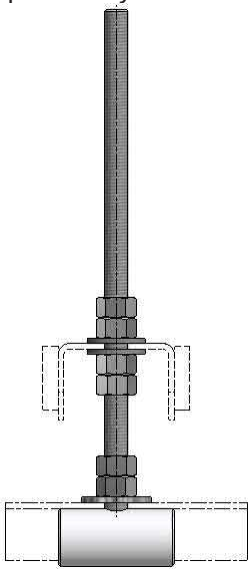

FIGURE 4.6

DANGER

<u>Open main disconnect switch</u>, tag and lockout before working on equipment. Failure to do so could result in injury or death of personnel.

BELT REPLACEMENT

1. For enclosed blower packages, remove the front panel of the noise hood.

2. For all blower packages, remove the belt guard unscrewing the brass fasteners. Do not remove the screws indicated with arrows in FIGURE-4.7.

3. Completely release tension on the spring of the belt tensioner device by unscrewing the nuts **N1** in FIGURE-4.8.

4. Fit the safety transport plates **43** as indicate in FIGURE-4.8.

5. Lock the lower safety transport plate with the lower nut **N2**.

6. Unscrew the upper nut **N1.** Loosen nut **N3** until it contacts the motor slide rail or plate (see FIGURE-4.9). Assure the belt guard slot does not contact the motor shaft.

7. Raise nut **N4** and upper plate 43 to contact the motor slide rail or plate.

8. Replace the V-belts.

START AT NOTE-9 AT INITIAL START-UP

9. Loosen nut **N4** and remove the upper plate 43 (save the plate for future use) and lower the motor slide rail or plate.

10. Tighten the V-belts to specification (see FIGURES-4.10 and 4.11).

11. Reinstall the upper plate 43 to running height (3/8" to 1/2" below the slide railor plate and lock in place using nuts **N4** and **N3**.

12. Reinstall the V-belt guard.

13. Reinstall the front panel of the noise hood.

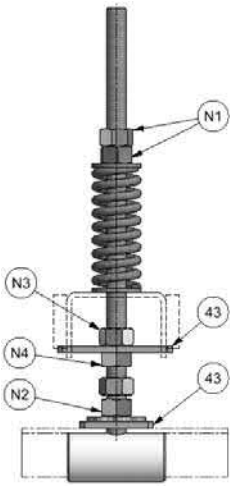

FIGURE-4.8

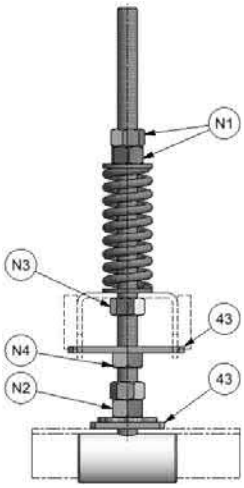

FIGURE-4.9

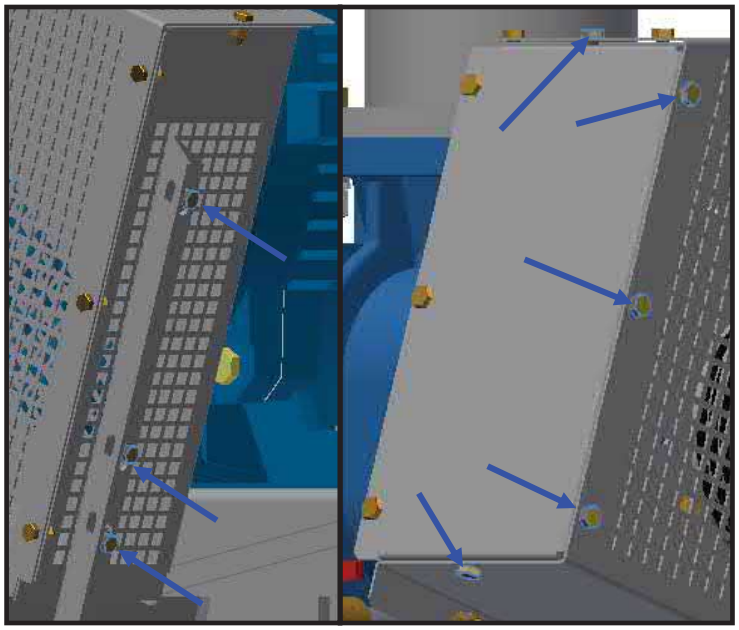

FIGURE-4.7

V-BELT TENSIONING REQUIREMENTS

Recommended deflection force per belt.

FIGURE-4.10

	Small Sheave Diameter Range (inches)	Small Sheave RPM Range	Speed Ratio Range	Recommended Deflection Force (lbs.)	
				Minimum	Maximum
3VX	2.20	1200 - 3600	2.00 to 4.00	2.8	4.1
	2.35 – 2.50	1200 - 3600		3.2	4.7
	2.65 – 2.80	1200 - 3600		3.5	5.1
	3.00 – 3.15	1200 - 3600		3.8	5.5
	3.35 – 3.65	1200 - 3600		4.1	6.0
	4.12 – 5.00	900 - 3600		4.8	7.1
	5.30 – 6.90	900 - 3600		5.8	8.6
5VX	4.40 – 4.65	1200 – 3600	2.00 to 4.00	9.0	13.0
	4.90 – 5.50	1200 – 3600		10.0	15.0
	5.90 – 6.70	1200 - 3600		11.0	17.0
	7.10 – 8.00	600 – 1800		13.0	19.0
	8.50 – 10.90	600 – 1800		14.0	21.0
	11.80 – 16.00	400 - 1200		15.0	23.0

DEFLECTION DISTANCE

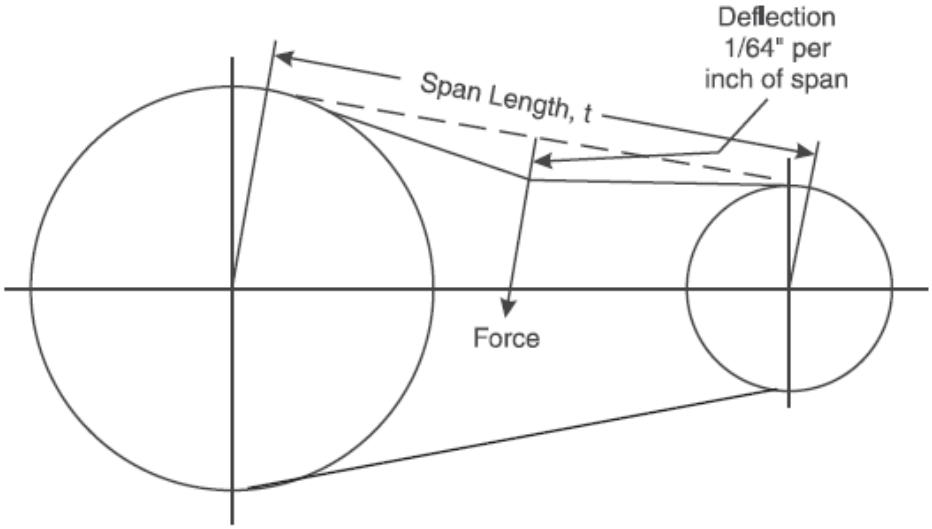

FIGURE-4.11

SYNCHRONOUS (COGGED) BELT TENSIONING REQUIREMENTS

Contact Gardner Denver customer service for belt tensioning requirements. Serial number of package is required.

FILTER REPLACEMENT

FRAMES 1-2-3

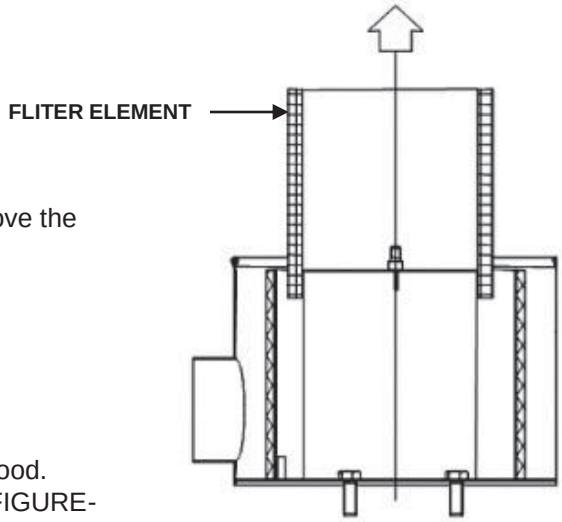

FIGURE-4.12

- For enclosed packages, open the roof panel.
- Unloosen the cover knob of the inlet silencer and remove the cover.
- Replace the filter element as shown in Figure-4.12.
- Position the silencer cover and tighten the knob.
- Close the roof panel.

FRAMES 4-5

- For enclosed packages, open the doors of the noise hood.
- Remove the rear panel of the silencer POS 312 (see FIGURE-4.13).
- Unloosen the locking screw of the adjustable baffle POS 315 (see FIGURE-4.13).
- Position the adjustable baffle in the center of the slide window of the silencer as shown in FIGURE-4.14.
- Remove the old element (dashed lines in FIGURE-4.14) following the arrow shown in FIGURE-4.14.
- Fix the edges of the new filter element.
- Position the adjustable baffle. See **SECTION 3 – INLET SILENCER SETTING**.
- Fix the nut POS 315.
- Position the rear panel of the silencer POS 312.
- Close the doors of the noise hood.

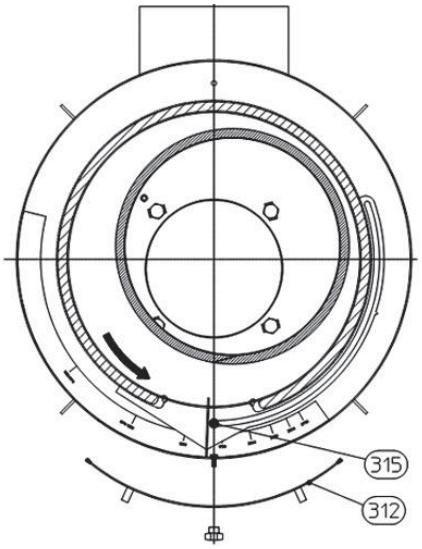

FIGURE-4.13

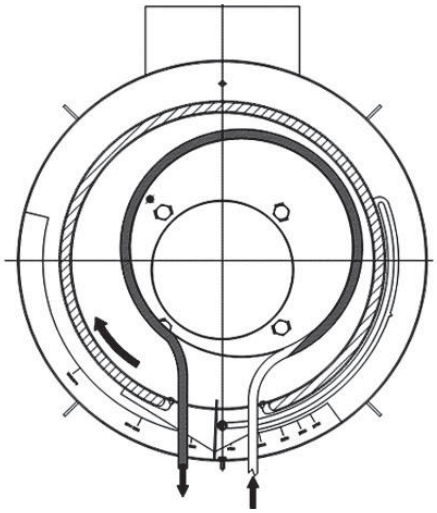

FIGURE-4.14

REPLACING THE SHAFT SEAL

- Disassemble the inlet filter.
- Disassemble the V-Belts as shown in Section 4 – BELT REPLCAEMENT.

WARNING
DO NOT hammer the shaft of the pulley.

- Empty the cooling circuit (only R/F) and disconnect the relevant piping.
- Drain the oil from the sump.

WARNING
Dispose of the used oil in accordance with local regulations.

- Remove the key and disassemble the sump.
- Replace the seal ring POS.43, clean the housing of the seal ring and replace the ring.

WARNING
DO NOT damage the lip of the ring during this step.

- Reassemble the sump onto the cover using a new gasket.
- Refill the sump with new lubrication oil (see Section 4 – OIL CHANGE).
- Reassemble the belts (see Section 4 – BELT REPLACEMENT).

Recommended Spare Parts

In the table below are indicated the recommended spare parts for normal use of the blower package according forecast timing. For the spare parts for the blower, refer to the blower manual.

Parts	Description	Recommended Quantity Required per Time Interval				
		Estimated Replacement Interval (hours)	Start-up	2 year	5 year	10 year
Blower Package	Filter element		1	2	5	10
	V-belt (set)		1	1	2	4
	Transmission pulleys		1	1	2	4
	Flex tube for /P, /V, /C (set)		1	1	2	4
	Flex tube for /V, /C (set)		1	1	2	4
	Flex tube for /C (set)		1	1	2	4
	VRC Flapper		1	1	2	4
	Starting valve gasket		1	1	2	4
	Starting valve diaphragm		1	1	2	4

When ordering replacement parts, always specify package type, serial number and date of manufacture of the package.

WARNING: Use only Gardner Denver original spare parts and accessories.

NOTICE
Gardner Denver Inc. will not be liable for any damage, breakdown and injury due to use of non-original spare parts or accessories.

SECTION 5
TROUBLESHOOTING

SAFETY PRECAUTIONS

1. Do not operate blower with open inlet or outlet port.
2. Do not exceed specified vacuum or pressure limitations.
3. Do not operate above or below recommended blower speed range.
4. Blower is not to be used where non-sparking equipment is specified.
5. Do not operate without belt guard.
6. The blower and blower discharge piping may be extremely hot and can cause skin burns on contact.
7. Prolonged exposure may require ear protection.

TROUBLESHOOTING

Not matter how well the equipment is designed and manufactured, there may be times when servicing will be required due to normal wear, the need for adjustment, or various external causes. Whenever equipment needs attention, the operator or repairman should be able to locate the cause and correct the trouble quickly. The Troubleshooting Chart below is provided to assist the mechanic in those respects.

QUICK REFERENCE TABLE

PROBLEM	POSSIBLE CAUSES	SOLUTION
Knocking	1. Unit out of time. 2. Distortion due to improper mounting or piping strains. 3. Excessive pressure differential. 4. Worn gears. 5. Worn bearings.	1. Retime impellers. 2. Check mounting alignment and relieve pipe strains. 3. Reduce to manufacturer's recommended pressure. Examine relief valve, re-set if necessary. 4. Replace timing gears. 5. Replace bearings.
Excessive blower temperature	1. Too much oil in gear case. 2. To low operating speed. 3. Clogged filter or muffler. 4. Excessive pressure differential. 5. Worn impeller clearances 6. Internal contact	1. Reduce oil level. 2. Increase blower speed. 3. Remove cause of obstruction. 4. Reduce pressure differential across the blower. 5. Replace impeller. 6. Correct clearances.
Impeller end or tip drag.	1. Insufficient assembled clearances. 2. Case or frame distortion. 3. Excessive operating pressure. 4. Excessive operating temperature.	1. Correct clearances. 2. Check mounting and pipe strain. 3. Remove cause. 4. Remove cause.
Lack of volume.	1. Slipping belts. 2. Worn clearances.	1. Tighten belts. 2. Re-establish proper clearances
Excessive bearing or gear wear.	1. Improper lubrication.	1. Correct lubrication level. Replace dirty oil.
Loss of oil.	1. Headplate, gear case or drive cover vents plugged. 2. Worn seal.	1. Clean vents. 2. Replace seals.

OTHER PROBLEMS AND CAUSES

Operating problems	List of Causes (see table page-49)
The motor does not start up and there is no noise	1-3-4
The motor does not start up, but humming noise heard	2-3-4-5-6-7
Automatic cut off just after start up	3-4-5-6-7-13-14-15-16
Inlet pressure different from the rated value	13-14
Capacity zero ⚠**Warning:** **STOP BLOWER PACKAGE IMMEDIATELY**	13-14-17-18-20-21-22
Outlet pressure different from the rated value ⚠**Warning:** **STOP BLOWER PACKAGE IMMEDIATELY**	5-8-13-14-15-16
Outlet temperature different from the rated value ⚠**Warning:** **STOP BLOWER PACKAGE IMMEDIATELY**	15-19-20-22-23
High absorbed power	3-5-6-7-15-16-17-18-19-20-21-22
Oil and/or liquid leakage	5-11-12-23
High oil temperature	5-6-7-9-24-25
Unusual noises and/or vibrations ⚠**Warning:** **STOP BLOWER PACKAGE IMMEDIATELY**	5-6-7-9-24-25
Relief valve does not close	15-16-17-18-19-20
Start valve does not close	26-27-28

Ref. No.	Cause	Solution	Ref.
1	At least two of electric connections have been cut off	Check the fuses, terminal boards and connection cables and if required replace them	4.6
2	One electric connection has been cut off	See point 1	4.6
3	Incorrect electric connection	Check electric system	4.6
4	Faulty motor	Check the electric motor	4.6
5	Rotors making contact	Check the internal clearances of the rotors and of the gears	6.7.4
6	Scale deposits in the compression chamber	Clean the compression chamber and the rotors	6.7.2
7	Intake of foreign particles	Remove the foreign particles and check the clearances	6.7.4
8	Rotors are worn	Check the internal clearances	6.7.4
9	Bearing are worn	Replace the bearings	(1)
10	Gaskets are worn	Replace the gaskets	(1)
11	Drive shaft seal is worn	Replace the seal	6.7.1
12	Oil level plugs are broken	Replace the oil levels	
13	Filter clogged	Clean or replace it	6.3
14	Inlet piping is clogged (only /C)	Check piping and remove obstruction	(2)
15	Outlet piping is clogged	Check piping and remove obstruction	(2)
16	Shut-off valve closed	Open it	(2)
17	Check valve positioned in wrong direction	Correct it	(2)
18	Wrong relief valve setting	Reset it	5.4
19	Small pipe line section	Increase it	4.1
20	Wrong transmission ratio	Correct it	6.5
21	V-belts drive	Check V-belts tension / replace V-belts	6.3
22	Wrong direction of rotation	Correct it	5.2
23	High oil level	Correct it	6.1
24	Motor secured properly	Fix it	6.4
25	Package secured properly	Fix it	4.3.1 4.3.2
26	No counter pressure	Adjust the starting valve Generate the counter pressure	5.4.2 (2)
27	Faulty diaphragm	Replace it	
28	Diaphragm chamber leaking	Make it air tight	

1. **Refer to blower manual.**
2. **Contact factory for assistance.**

GENERAL PROVISIONS AND LIMITATIONS
Gardner Denver (the "Company") warrants to each original retail purchaser ("Purchaser") of its products from the Company or its authorized distributor that such products are, at the time of delivery to the Purchaser, made with good material and workmanship. No warranty is made with respect to:

1. Any product which has been repaired or altered in such a way, in the Company's judgment, as to affect the product adversely.
2. Any product which has, in the Company's judgment, been subject to negligence, accident, improper storage, or improper installation or application.
3. Any product which has not been operated or maintained in accordance with the recommendations of the Company.
4. Components or accessories manufactured, warranted and serviced by others.
5. Any reconditioned or prior owned product.

Claims for items described in (4) above should be submitted directly to the manufacturer.

WARRANTY PERIOD
The Company's obligation under this warranty is limited to repairing or, at its option, replacing, during normal business hours at an authorized service facility of the Company, any part which in its judgment proved not to be as warranted within the applicable Warranty Period as follows. Regular lubricant sampling and use of genuine GD OEM parts are strongly recommended.

BARE BLOWERS
Basic dual splash lubricated bare blowers, consisting of all parts within, are warranted for 12 months from date of initial use or 18 months from date of shipment to the first purchaser, whichever occurs first. Any disassembly or partial disassembly of the blower, or failure to return the "unopened" blower per Company instructions, will be cause for denial of warranty.

OTHER COMPONENTS
All other components, except normal wearing parts, are warranted for 12 months from initial use or 18 months from date of shipment to first purchaser, whichever comes first. The Company reserves the right to withdraw the Warranty where evidence indicates application outside the stated performance area, or where there is evidence of abuse.

LABOR TRANSPORTATION AND INSPECTION
The Company will provide labor, by Company representative or authorized service personnel, for repair or replacement of any product or part thereof which in the Company's judgment is proved not to be as warranted. Labor shall be limited to the amount specified in the Company's labor rate schedule. Labor costs in excess of the Company rate schedules caused by, but not limited to, location or inaccessibility of equipment, or labor provided by unauthorized service personnel is not provided by this warranty. All costs of transportation of product, labor or parts claimed not to be as warranted and, of repaired or replacement parts to or from such service facilities shall be borne by the Purchaser. The Company may require the return of any part claimed not to be as warranted to one of its facilities as designated by the Company, transportation prepaid by Purchaser, to establish a claim under this warranty. Replacement parts provided under the terms of the warranty are warranted for the remainder of the Warranty Period of the product upon which installed to the same extent as if such parts were original components.

DISCLAIMER
THE FOREGOING WARRANTY IS EXCLUSIVE AND IT IS EXPRESSLY AGREED THAT, EXCEPT AS TO TITLE, THE COMPANY MAKES NO OTHER WARRANTIES, EXPRESSED, IMPLIED OR STATUTORY, INCLUDING ANY IMPLIED WARRANTY OF MERCHANTABILITY.
THE REMEDY PROVIDED UNDER THIS WARRANTY SHALL BE THE SOLE, EXCLUSIVE AND ONLY REMEDY AVAILABLE TO THE PURCHASER AND IN NO CASE SHALL THE COMPANY BE SUBJECT TO ANY OTHER OBLIGATIONS OR LIABILITIES. UNDER NO CIRCUMSTANCES SHALL THE COMPANY BE LIABLE FOR ANY SPECIAL, INDIRECT, INCIDENTAL OR CONSEQUENTIAL DAMAGES, EXPENSES, LOSSES OR DELAYS HOWSOEVER CAUSED.

No statement, representation, agreement, or understanding, oral or written, made by any agent, distributor, representative, or employee of the Company which is not contained in this Warranty will be binding upon the Company unless made in writing and executed by an officer of the Company. This warranty shall not be effective as to any claim which is not presented within 30 days after the date upon which the product is claimed not to have been as warranted. Any action for breach of this warranty must be commenced within one year after the date upon which the cause of action occurred. Any adjustment made pursuant to this warranty shall not be construed as an admission by the Company that any product was not as warranted.

NOTES

IQRB-100VER00

For additional information contact your local representative or
Gardner Denver, 1800 Gardner Expressway, Quincy, IL 62305
Customer Service Department
Telephone: (800) 682-9868 Fax: (217) 221-8780
Sales and Service in all major cities.
www.gardnerdenver.com pd.blowers@gardnerdenver.com

Gardner Denver	IQRB Frame 1 Technical Information Sheet	[Eng. Rev. 2] 5/13/2019
		Form #: EDS30
	460V / 60 Hz	Machine Version: A

Performance Data		RBS 15						RBS 25		
		50 CFM			100 CFM			150 CFM		
Working Pressure		Blower Shaft Power (hp)	Disch. Temp above Ambient (°F)	Free Field Noise Level for Enclosed Unit (dB(A)) (1)	Blower Shaft Power (hp)	Disch. Temp above Ambient (°F)	Free Field Noise Level for Enclosed Unit (dB(A)) (1)	Blower Shaft Power (hp)	Disch. Temp above Ambient (°F)	Free Field Noise Level for Enclosed Unit (dB(A)) (1)
5	psi	2.1	84	<70	3.6	71	<70	5.7	72	72
6	psi	2.5	104	<70	4.2	86	<70	6.6	87	72
7	psi	3.0	125	<70	4.9	102	<70	7.6	102	73
8	psi	3.4	147	<70	5.6	118	<70	8.6	117	73
9	psi	3.9	169	<70	6.2	135	<70	9.5	133	74
10	psi	4.4	191	<70	6.9	151	70.00	10.5	149	74
11	psi	4.9	216	<70	7.7	169	71.00	11.6	166	75

Electrical Data											
Nominal Motor Rating	hp	3		5		7.5		10		15	
Poles	#	2	4	2	4	2	4	2	4	2	4
Full Load Current Max.@460V(2)	Amps	3.68	3.9	5.96	6.4	8.76	6.41	11.6	12.4	17.2	18.0
Standard Drive Motor Detail	IP	IP55	IP55	IP55	IP55	IP55	IP55	IP55	IP55	IP55	IP55
Drive Motor Manufacturer (3)		WEG		WEG		WEG		WEG		WEG	
Drive Motor Speed	rpm	3510	1760	3510	1755	3520	1765	3515	1765	3530	1765

Cooling Data		115V - 60 Hz	230V - 50 Hz	230V - 60 Hz
Ventilating Fan Capacity	CFM	520	520	595
Full Load Current Max.	Amps	0.7	0.29	0.35
Size of Cooling Air Inlet Aperture	inch (mm)	7.87 (200)	7.87 (200)	7.87 (200)
Size of Cooling Air Outlet Aperture	inch (mm)	7.87 (200)	7.87 (200)	7.87 (200)
Total Power Consumption	W (hp)	80.5 (0.108)	66.7 (0.089)	80.5 (0.108)
Max. allowable pressure drop in duct @ambient 95°F / 113°F	Pa	95	95	80

Weight, Dimensions & Capacities		RBS 15	RBS 25
Blower Oil Capacity (Gear & Drive)	gal. (liter)	0.19 (0.72)	0.19 (0.72)
Discharge Connection Size	inch (mm)	3 (75)	3 (75)
Inlet Connection Size (C/L Only)	inch (mm)	3 (75)	3 (75)

Enclosed Unit Data		RBS 15	RBS 25
Length	in. (mm)	31.89 (810)	31.89 (810)
Width	in. (mm)	29.92 (760)	29.92 (760)
Height (Lid Closed)	in. (mm)	40.16 (1020)	40.16 (1020)
Weight (Without Motor)	lb.(kg)	714.47 (324.08)	714.47 (324.08)
Outline Dwg.		301RBX800	301RBX800

Unenclosed Unit Data (Pressure)		RBS 15	RBS 25
Length	in. (mm)	38 (965.5)	38.7 (983)
Width	in. (mm)	27.83 (707)	27.83 (707)
Height	in. (mm)	29.43 (747.5)	29.90 (759.5)
Weight (Without Motor)	lb. (kg)	388.83 (176.37)	388.83 (176.37)
Outline Dwg.		TEN03135	TEN03145

(1) Measured in free field conditions in accordance with the ISO 2151, tolerance ± 3dB

Gardner Denver policy is one of continuous improvement and we therefore reserve the right to alter specifications without prior notice.

(2) Wiring, wire sizes, and over current protective devices utilized to power the blower should be selected and installed in accordance with all applicable local electrical codes. NEC table 430.250 can be utilized to determine wire sizing only for fixed speed blowers, however local electrical codes always take precedence and should be consulted prior to sizing and running wire to operate the blower.

(3) Baldor motors are also available

REVISIONS				
REV	DESCRIPTION	DATE	DRAWN	CK'D
01	ADDED ELECTRICAL BOX AS PER ECN 1100838	06/09/2016	L&T	MWS

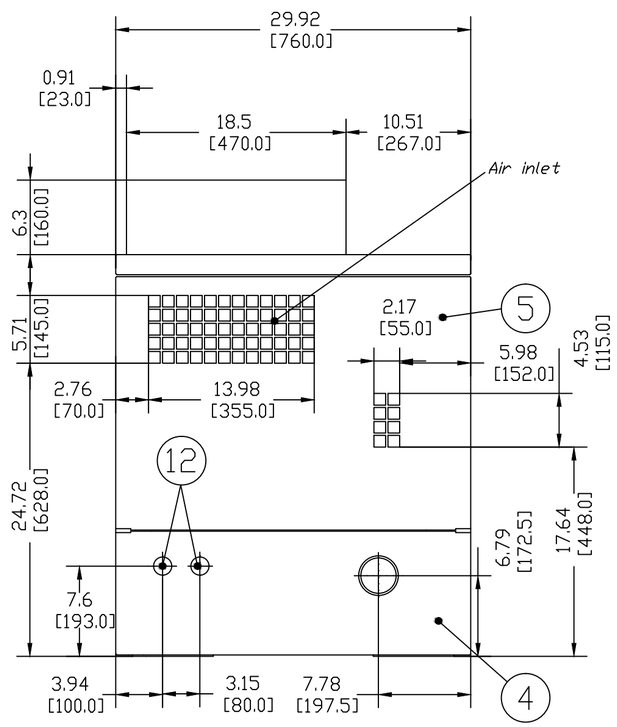

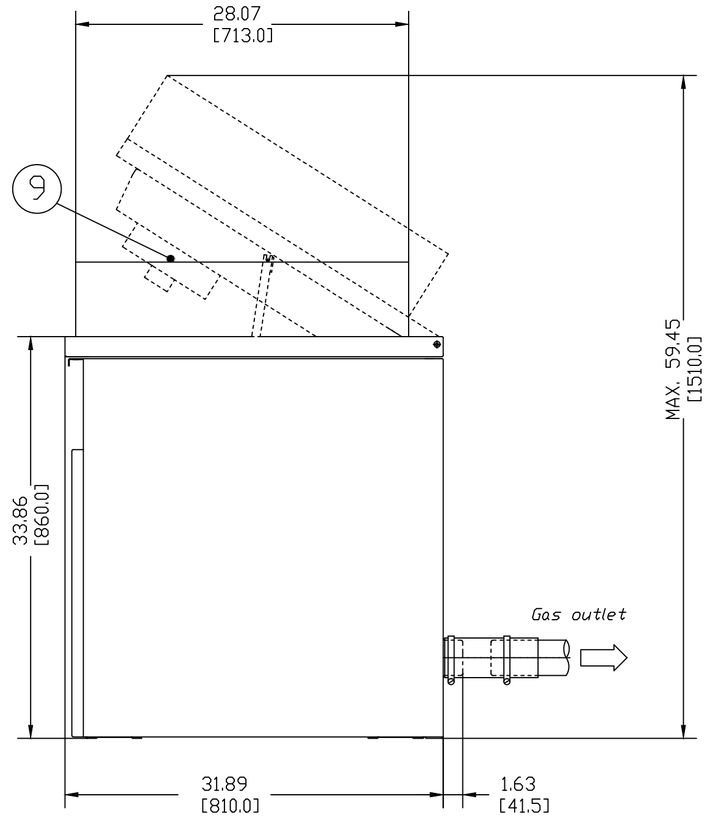

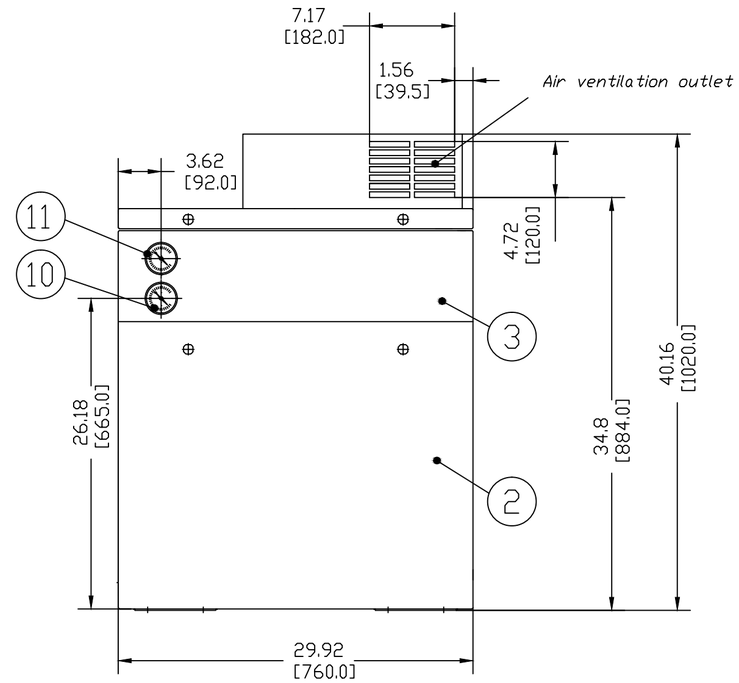

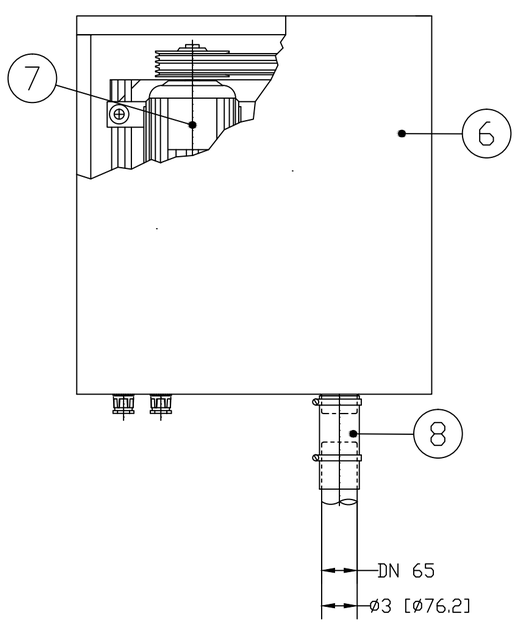

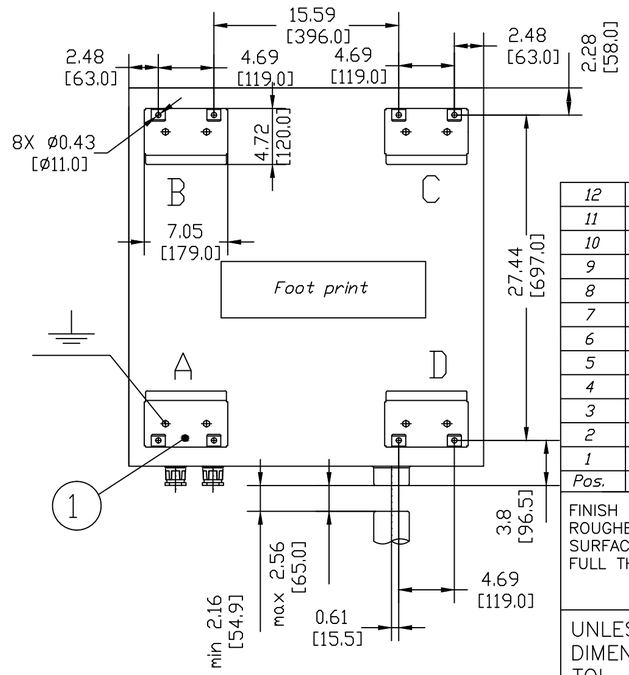

Pos.	Drawing No.	Denomination	Quantity	Model No.	Material
12	202445-0947	Cable gland PG 29	2		
11	202573-0000	Pressure gauge DN 63	1		
10	202574-0000	Vacuum gauge DN 63	1		
9	205044-0000	Fan CLU 200-2T01	1		
8	187789-0958	Elastic connector ER 65	1		
7	.	Electric Motor	1		
6	323093-1094	Roof Panel	1		
5	323089-1094	Rear Panel	1		
4	323090-1094	Inferior Rear Panel	1		
3	303087-1305	Front Panel Top	1		
2	323086-1094	Front Panel	1		
1	323072-0134	Base Plate	4		

FINISH OF CHAMFERS & FILLETS TO CONFORM TO ROUGHEST ADJACENT AREA.
SURFACE ROUGHNESS MAX. PER ASME B46.1 SPEC.
FULL THD DEPTHS ARE MINIMUM.

UNLESS OTHERWISE SPECIFIED
DIMENSIONS ARE IN INCHES
TOL. ON DECIMALS: .X = ±.05
TOL. ON DECIMALS: .XX = ±.02
TOL. ON DECIMALS: .XXX AS SPECIFIED
TOL. ON ANGLES: ± 0°–30'

DIMENSIONING AND TOLERANCING PER ASME Y14.5–2009
THREADS PER ASME B1.1 GAGING SYSTEM 21 U.O.S., ANSI B1.20.1 & B1.20.3

FIRST ANGLE PROJECTION

Gardner Denver
Gardner Denver Inc.
Quincy, IL.

HEAT TREATMENT

ENG. REF: 278714–0000

TITLE
ES 25 1P
IQ–RB

DWN BY	L&T 04/13/2015	SIZE	ENGR. APPROVAL	DWG NO.	REV
CK'D BY	TAM 05/15/2015	C	TAM	303RBX800	01
		SCALE 1:1		SHEET 1 of 1	

Gardner Denver

PARTS LIST OPERATING AND SERVICE MANUAL

RBS
BLOWERS

Models
RBS 15-225

ENERGY STAR PARTNER

RB-7-100
Version 02
May 05, 2017

MAINTAIN BLOWER RELIABILITY AND PERFORMANCE WITH GENUINE GARDNER DENVER PARTS AND SUPPORT SERVICES

Factory genuine parts, manufactured to design tolerances, are developed for optimum dependability - - - specifically for your blower. Design and material innovations are born from years of experience with hundreds of different blower applications. When you specify factory genuine parts you are assured of receiving parts that incorporate the most current design advancements manufactured in our state-of-the-art blower factory under exacting quality standards.

Your AUTHORIZED DISTRIBUTOR offers all the backup you require. A worldwide network of authorized distributors provides the finest product support in the blower industry.

1. Trained technical representatives to assist you in selecting the correct replacement parts.

2. Complete inventory of new machines and new, genuine factory parts.

3. A full line of factory tested AEON® PD blower lubricants, specifically formulated for optimum performance in all blowers.

4. Authorized distributor service technicians are factory-trained and skilled in blower maintenance and repair. They are ready to respond and assist you by providing fast, expert maintenance and repair service.

INSTRUCTIONS FOR DETERMINING BLOWER CONFIGURATION

1. Face the blower drive shaft.
2. In a **VERTICAL** configuration, air flow is Horizontal.
3. In a **HORIZONTAL** configuration, air flow is Vertical.
4. In a vertical configuration, a **BOTTOM HAND** exists when the drive shaft is below the horizontal center line of the blower. A **TOP HAND** exists when the drive shaft is above the horizontal center line of the blower.
5. In a horizontal configuration, a **RIGHT HAND** exists when the drive shaft is to the right of the vertical center line of the blower. A **LEFT HAND** exists when the drive shaft is to the left of the vertical center line of the blower.

INSTRUCTIONS FOR ORDERING REPAIR PARTS

For pricing, and ordering information contact your nearest AUTHORIZED FACTORY DISTRIBUTOR. When ordering parts, specify Blower **MODEL** and **SERIAL NUMBER** (see nameplate on unit).

Rely upon the knowledge and experience of your AUTHORIZED DISTRIBUTOR and let them assist you in making the proper parts selection for your blower.

To Contact Gardner Denver or locate your local distributor:
Visit: www.contactgd.com/mobile

Or

Call: (217)222-5400

GARDNER DENVER LUBRICANT ORDER INFORMATION

Re-order Part Numbers for Factory Recommended Lubricants.

Gear and Drive End

AEON PD Synthetic Lubricant, AEON PD-XP—Extreme Duty Synthetic Lubricant or AEON PD-FG—Food Grade Synthetic Lubricant

AEON PD Synthetic Lubricant

Description	Part Number
1 Quart	28G23
Case/12Quarts	28G24
1 Gallon Container	28G40
Case/6 Gallons	28G41
5 Gallon Pail	28G25
55 Gallon Drum	28G28

AEON PD-XD – Extreme Duty Synthetic Lubricant

Description	Part Number
1 Quart	28G46
Case/12Quarts	28G47
1 Gallon Container	28G42
Case/6 Gallons	28G43
5 Gallon Pail	28G44
55 Gallon Drum	28G45

AEON PD-FG – Food Grade Synthetic Lubricant

Description	Part Number
1 Quart	28H97
Case/12Quarts	28H98
1 Gallon Container	28H333
Case/6 Gallons	28H334
5 Gallon Pail	28H99
55 Gallon Drum	28H100

Drive End

AEON PD Grease

Description	Part Number
Case/10 Tubes (14oz/Tube)	28H283

Call your local Gardner Denver Distributor to place your order for Gardner Denver lubricants. Your Authorized Gardner Denver Distributor is:

_____

_____

_____

FOREWORD

RBS® blowers are the result of advanced engineering and skilled manufacturing. To be assured of receiving maximum service from this machine, the owner must exercise care in its operation and maintenance. This manual is written to give the operator and maintenance department essential information for day-to-day operation, maintenance and adjustment. Careful adherence to these instructions will result in economical operation and minimum downtime.

⚠ DANGER
Danger is used to indicate the presence of a hazard which will cause severe personal injury, death, or substantial property damage if the warning is ignored.

⚠ WARNING
Warning is used to indicate the presence of a hazard which can cause severe personal injury, death, or substantial property damage if the warning is ignored.

⚠ CAUTION
Caution is used to indicate the presence of a hazard which will or can cause minor personal injury or property damage if the warning is ignored.

NOTICE
Notice is used to notify people of installation, operation or maintenance information which is important but not hazard-related.

SAFETY PRECAUTIONS

Safety is everybody's business and is based on your use of good common sense. All situations or circumstances cannot always be predicted and covered by established rules. Therefore, use your past experience, watch out for safety hazards and be cautious. Some general safety precautions are given below:

⚠ DANGER

Failure to observe these notices could result in injury to or death of personnel.

- **Keep fingers and clothing away from revolving fan, drive coupling, etc.**
- **Do not use the air discharge from this unit for breathing – not suitable for human consumption.**
- **Do not loosen or remove the oil filler plug, drain plugs, covers or break any connections, etc., in the blower air or oil system until the unit is shut down and the air pressure has been relieved.**
- **Electrical shock can and may be fatal.**
- **Blower unit must be grounded in accordance with the National Electrical Code. A ground jumper equal to the size of the equipment ground conductor must be used to connect the blower motor base to the unit base.**
- **Open main disconnect switch, tag and lockout before working on the control.**
- **Disconnect the blower from its power source, tag and lockout before working on the unit – this machine may be automatically controlled and may start at any time.**

⚠ WARNING

Failure to observe these notices could result in damage to equipment.

- **Stop the unit if any repairs or adjustments on or around the blower are required.**
- **Disconnect the blower from its power source, tag and lockout before working on the unit – this machine maybe automatically controlled and may start at any time.**
- **Do not exceed the rated maximum speed shown on the nameplate.**
- **Do not operate unit if safety devices are not operating properly. Check periodically. Never bypass safety devices.**

TABLE OF CONTENTS

MAINTAIN BLOWER RELIABILITY AND PERFORMANCE....2

FOREWORD 4

SAFETY PRECAUTIONS 5

INTRODUCTION 8

SECTION 1, EQUIPMENT CHECK 9

SECTION 2, INSTALLATION 11

SECTION 3, LUBRICATION 17

SECTION 4, OPERATION 21

SECTION 5, MAINTENANCE 25

SECTION 6, DISASSEMBLY INSTRUCTIONS 26

SECTION 7, PARTS LIST 28

INDEX

Air filters and filter silencers.....16
Blower startup checklist.....23
Disassembly instructions, section 6.....26
Disassembly instructions 26
Drive end lubrication 17, 18
Drive installation 12
Equipment check, section 1
Equipment check 9
Equipment check, section 1.....9
Foundations 11
Gear end lubrication 18
Installation, section 2
Installaion.....11
Installation, section 2 11
Introduction 8
Limitations.....22
Location 11
Lubricataion, section 3.....17
Lubrication, section 3
Lubrication 17
Mounting configurations..... 11
Operation, section 4
Operation 22
Operation, section 4..... 22
Parts list, section 8..... 28
Piping 13
Recommended lubricant..... 20
Removing protective materials 9
Repositioning the mounting feet 11
Safety precautions 5
Safety precautions 24
Maintenance section 5..... 25
Maintenance 25
Storage 9
Trouble shooting 24

LIST OF ILLUSTRATIONS

FIGURE 2-1 – BLOWER MOUNTING CONFIGURATION.....12

FIGURE 2-2 – BELT DRIVE OVERHUNG LOAD CALCULATIONS.....14

FIGURE 3-1 - LUBRICATION 17

FIGURE 3-2 – APPROXIMATE OIL CAPACITIES.....18

FIGURE 3-3 – AEON PD SYNTHETIC LUBRICANT 19

FIGURE 3-4 – SYNTHETIC LUBRICANT CHART.....19

FIGURE 4-1 – MAXIMUM / MINIMUM OPERATING LIMITATIONS…… 21

FIGURE 5-1 – MAINTENANCE CHECK LIST 25

FIGURE 7-1 – RBS 15-225 SECTIONAL DRAWINGS 28

FIGURE 7-2 – RBS 35-106 SECTIONAL DRAWINGS 30

FIGURE 7-3 – RBS 115-225 SECTIONAL DRAWINGS 33

INTRODUCTION
YOUR KEY TO TROUBLE FREE SERVICE

Thank you for investing in Gardner Denver quality. The Gardner Denver reputation for rugged dependability has been earned by over 50 years of service in demanding, industrial operations where downtime cannot be tolerated and efficient blower performance is expected.

Your Gardner Denver RBS blower is a precision engineered blower that has been carefully manufactured and thoroughly tested at the state-of the art Gardner Denver Blower Factory in PARMA, ITALY.

As with other precision machinery, there are several relatively simple installation, operation and maintenance procedures that you must observe to assure optimum blower performance. There is no guesswork in the manufacture of your highly advanced RBS blower and there must be none in preparing the blower to get the job done in the field.

The purpose of this manual is to help you properly install, operate and maintain your RBS blower. It is essential that you review all sections of this manual in preparation for installing your blower. Follow the instructions for installing your blower. Follow the instructions carefully and you will be rewarded with trouble-free Gardner Denver RBS service year in and year out.

SECTION 1
EQUIPMENT CHECK

Before uncrating, check the packing slip carefully to be sure all the parts have been received. All accessories are listed as separate items on the packing slip, and small important accessories such as relief valves can be overlooked or lost. After every item on the packing slip has been checked off, uncrate carefully.

NOTICE
Register a claim with the carrier for lost or damaged equipment.

⚠ WARNING
Customers are cautioned to provide adequate protection, warning and safety equipment necessary to protect personnel against hazards involved in installation and operation of this equipment in the system or facility.

STORAGE

Your Gardner Denver Blower was packaged at the factory with adequate protection to permit normal storage for up to six (6) months.

If the unit is to be stored under adverse conditions or for extended periods of time, the following additional measures should be taken to prevent damage.

1. Store the blower in a clean, dry, heated (if possible) area.
2. Make certain inlet and discharge air ports are tightly covered to prevent foreign material from entering the air box.
3. All exposed, non-painted surfaces should be protected against rust and corrosion.
4. Provide adequate protection to avoid accidental mechanical damage.
5. In high humidity or corrosive environments, additional measures may be required to prevent rusting of the blower internal surfaces.
6. To prevent rusting of gears, bearings, etc., the oil reservoirs may be filled with normal operating oil.

⚠ CAUTION
Before running the blower, drain the oil and replace to the proper operating level with clean, fresh lubricant.

7. Rotate the blower shaft (10 to 25 turns) weekly during storage. Inspect the blower shaft (near the shaft seal area) monthly and spray with rust inhibitor if needed.
8. For long term storage (over six (6) months), contact Gardner Denver Compressor Division Customer Service for recommendations.

REMOVING PROTECTIVE MATERIALS

The shaft extension is protected with rust inhibitor which can be removed with any standard solvent.

⚠ CAUTION
Follow the safety directions of the solvent manufacturer.

Blower inlet and outlet are temporarily capped to keep out dirt and other contaminants during shipment. These covers must be removed before start-up.

The internal surfaces of all RBS units are mist sprayed with a rust preventative to protect the machine during shipment. Remove this film upon initial startup, using any commercial safety solvent. Position the blower so that the inlet and discharge connections are in the vertical position (vertical airflow). On vertically mounted units, it will be necessary to lay the unit on its side supporting the ends of the unit so as not to restrict the port on the bottom side. Place a shallow pan on the underside of the unit. With the blower disconnected from power, spray the solvent in the top port, rotating the impellers by spinning the shaft manually. Continue this procedure until the unit is visibly clean.

⚠ WARNING
Rotating components will cause severe injury in case of personal contact. Keep hands and loose clothing away from blower inlet and discharge ports.

SECTION 2
INSTALLATION

LOCATION

Install the blower in a well lit, clean dry place with plenty of room for inspection and maintenance.

FOUNDATIONS

For permanent installation we recommend concrete foundations be provided, and the equipment should be grouted to the concrete. It is necessary that a suitable base be used, such as a steel combination base under blower and motor, or a separate sole plate under each. Before grouting, equipment must be leveled, free of all strains, and anchored so no movement will occur during setting of grout. After grout has completely hardened, a recheck is necessary to compensate for shrinkage, etc. If required, add shims under blower feet after final tightening of foundation anchor bolts to remove strain from the blower housing.

Where jack screws or wedges are used during grouting, they must be backed off and wedges removed before final tightening of anchor bolts. Refer to grouting instructions.

Where a concrete foundation is not feasible, care must be taken to insure that equipment is firmly anchored to adequate structural members, restricting movement and vibration.

MOUNTING CONFIGURATIONS

The blower flex-mount design enables horizontal and vertical mounting configurations with top or bottom hand, right or left hand shaft positioning. The units are discharge timed allowing rotation in one direction (refer to Figure 2-1).

REPOSITIONING THE MOUNTING FEET

1. Position the mounting feet to the desired location and snug the cap screw.

2. Place the blower on its feet on a flat surface.

3. Loosen mounting feet cap screws and level unit up. The bench or blower base flatness should be within .002 of an inch.

NOTICE
If the unit is not flat within .002 of an inch, it will be necessary to shim the blower feet at installation.

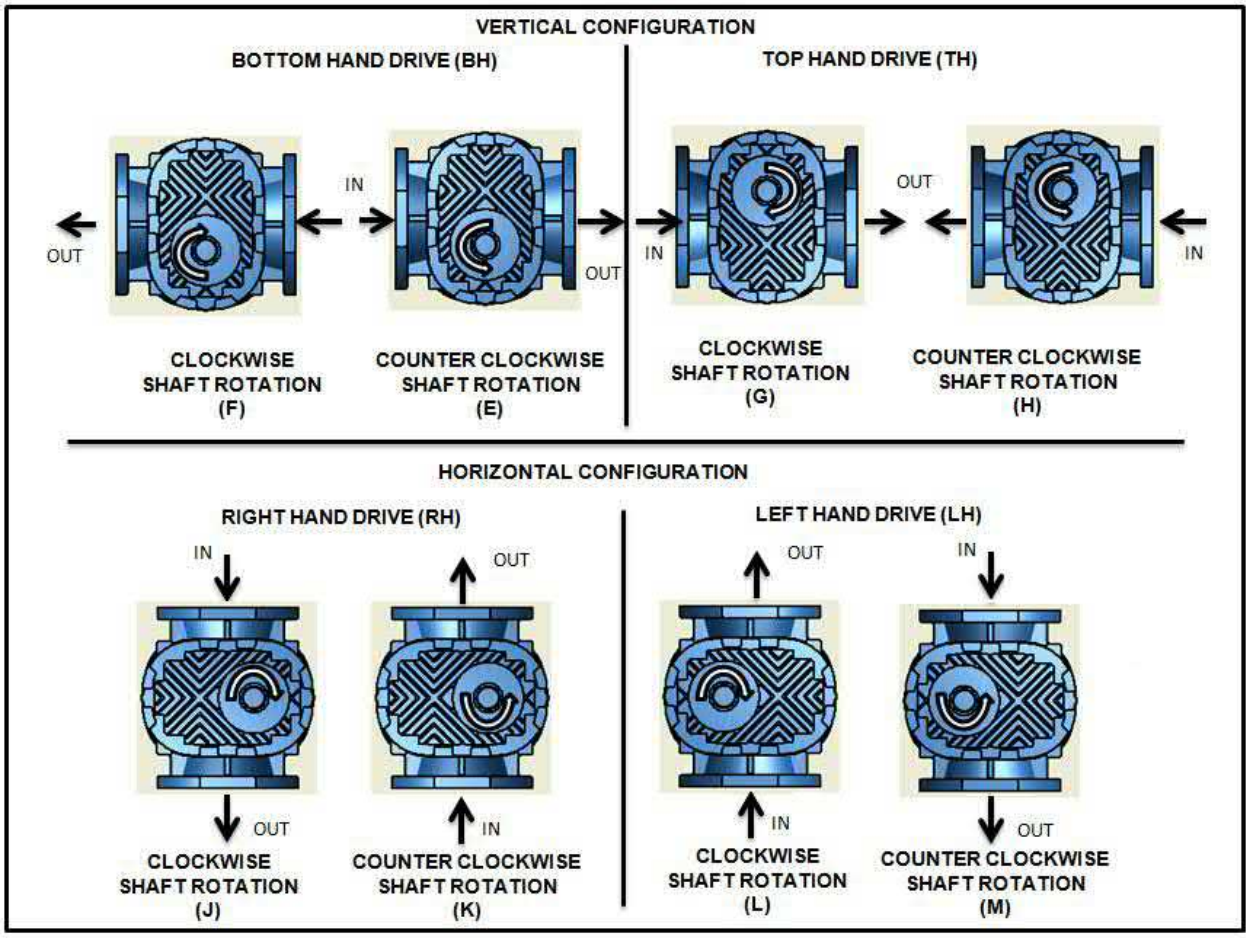

FIGURE 2-1 – BLOWER MOUNTING CONFIGURATIONS

4. Secure the mounting feet capscrews to the torque value in Figure 7-9.

NOTICE
When changing mounting configuration, it may be necessary to reposition breather/oil fill (B), oil level gauge (H) and drain plug (A). Refer to Figure 3-1, for correct location.

DRIVE INSTALLATION

When selecting a V-belt drive, check to be sure the shaft overhung load limitation is not exceeded. Refer to FIGURE 2-2, for overhung load calculations and limitations.

Belt drives must be carefully aligned. Motor and blower pulleys must be parallel to each other and in the same plane within 1/32 inch. Belt tension should be carefully adjusted to the belt manufacturer's recommendation using a belt tension gauge. Check tension frequently during the first day of operation.

⚠ WARNING
Over tightening belts leads to heavy bearing loads and premature failure.

On the direct connected units, alignment and lubrication of couplings to specifications of the coupling manufacturer is very important. When mounted drives are supplied from the factory proper alignment has been established before shipment. However, during shipping, handling and installation, it is likely that the alignment has been disturbed and final adjustment must be made before startup.

WARNING

Exceeding overhung load limitations leads to unwarrantable premature bearing failure and shaft breakage.

The location of the sheave on the blower shaft greatly affects the stress in the shaft. The optimum blower sheave positioning is as close as possible to the blower drive cover.

The calculated shaft load must not exceed the maximum allowable load listed in Maximum Belt Load Chart, FIGURE 2-2. If the calculated shaft load exceed the maximum allowable load:

- Increase Sheave Diameters to Reduce Belt Pull
- Use Jackshaft Drive
- Use Direct Coupled or Gearbox Drive

To calculate shaft load for a given V-Belt Drive Arrangement:

- Insert the belt pull into the formula for Calculation of Shaft load, FIGURE 2-2, to arrive at the calculated shaft load.

PIPING

Inlet and discharge connections on all blowers are large enough to handle maximum volume with minimum friction loss. Reducing the pipe diameter on either inlet or discharge will only create additional line loss and increase the overall pressure differential. Excessive weight of piping and fittings will cause internal misalignment and premature wear. Never allow the blower to carry the weight of the pipe. If possible, a spool or sleeve-type expansion joint should be installed between the unit and the piping. Where a flexible connection is not practical, the weight of the rigid connection must be separately supported.

All system piping must be cleaned internally before connecting to the blower.

WARNING

RBS blowers are shipped dry from the factory. Do not attempt to operate the blower before following proper lubrication instructions. Permanent damage to the gears, bearings and seals will occur.

FIGURE 2-2 – BELT DRIVE OVERHUNG LOAD CALCULATIONS

RBS OVERHUNG LOAD

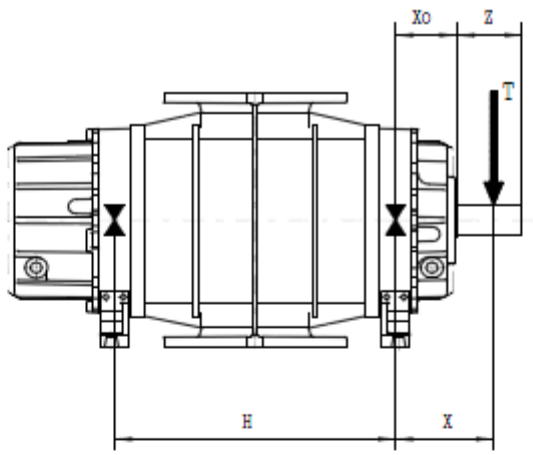

Blower	Gear size		H		xo		Z	
size	mm	inch	mm	inch	mm	inch	mm	inch
15	68	2,7	175	6,9	41	1,6	50	2,0
25			210	8,3				
35	85	3,3	215	8,5	53	2,1	80	3,1
45			275	10,8				
46			375	14,8				
55	107	4,2	276	10,9	56	2,2	110	4,3
65			341	13,4				
66			451	17,8				
75	135	5,3	316	12,4	62	2,4	110	4,3
85			431	17,0				
86			541	21,3				
95	168	6,6	406	16,0	77	3,0	140	5,5
105			501	19,7				
106			651	25,6				
115	212	8,3	480	18,9	85	3,3	140	5,5
125			590	23,2				
126			790	31,1				
135	270	10,6	542	21,3	100	3,9	170	6,7
145			747	29,4				
155			897	35,3				
165	340	13,4	750	29,5	105	4,1	210	8,3
175			970	38,2				
205	425	16,7	890	35,0	114	4,5	210	8,3
225			1240	48,8				

$$T = T_0 \cdot \frac{x_0 + H}{x + H} \quad \text{Lbs.}$$

T_o=Max load at z=0 (see table in next page)

RBS OVERHUNG LOAD

Blower size	maximum belt load To [lbs]							
	0°	45°	90°	135°	180°	225°	270°	315°
15	112	90	67	73	79	84	90	101
25	112	90	67	73	79	84	90	101
35	360	288	216	234	252	270	288	324
45	360	288	216	234	252	270	288	324
46	292	234	175	190	205	219	234	263
55	585	468	351	380	409	438	468	526
65	585	468	351	380	409	438	468	526
66	495	396	297	321	346	371	396	445
75	899	719	540	585	629	674	719	809
85	899	719	540	585	629	674	719	809
86	787	629	472	433	393	492	590	688
95	1236	989	742	680	618	773	927	1082
105	1236	989	742	680	618	773	927	1082
106	1012	809	607	556	506	632	759	885
115	2698	2158	1619	1484	1349	1686	2023	2360
125	2698	2158	1619	1484	1349	1686	2023	2360
126	2158	1727	1295	1187	1079	1349	1619	1888
135	3372	2698	2023	1855	1686	2108	2529	2951
145	3372	2698	2023	1855	1686	2108	2529	2951
155	2698	2158	1619	1484	1349	1686	2023	2360
165	4496	3597	2698	2473	2248	2810	3372	3934
175	4496	3597	2698	2473	2248	2810	3372	3934
205	5620	4496	3372	3091	2810	3513	4215	4918
225	5620	4496	3372	3091	2810	3513	4215	4918

AIR FILTERS AND FILTER SILENCERS

⚠WARNING

Servicing the air filters is one of the most important maintenance operations to be performed to insure long blower life.

Servicing frequency of filter elements is not time predictable. A differential pressure indicator, with a continuous gauge reading, should be installed across the inlet filter. It will tell how much of the service life of the filter element has been used. It will also eliminate both premature filter servicing and premature blower failure due to a plugged filter when the filter pressure drop is used to establish maintenance points. In all cases refer to the filter manufacturer's service instructions. Due to the many types of filters, it is not practical to give specific instructions covering all models.

NOTICE

No matter what type of filter is used, always make sure all seats, gaskets, clamps and hose connections on the filter and inlet line are absolutely air tight. Each time the filter is serviced, inspect interior of the blower for dirt.

SECTION 3
LUBRICATION

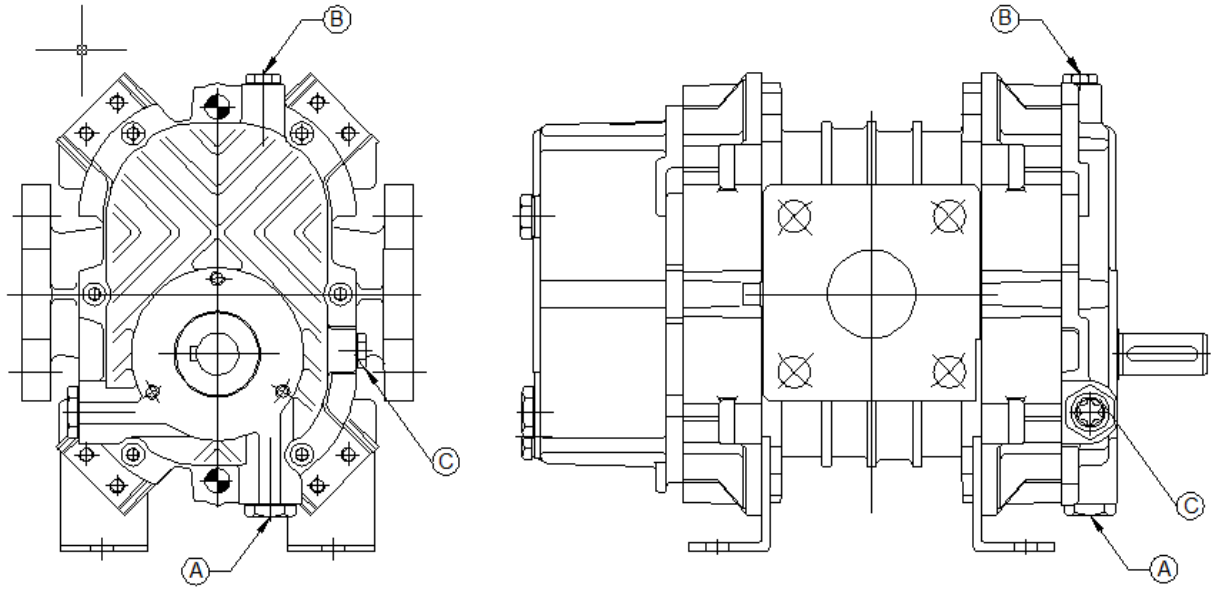

A. OIL DRAIN PLUG
B. BREATHER/OIL FILL
C. OIL LEVEL GAUGE

FIGURE 3-1 – LUBRICATION

DRIVE END LUBRICATION (For Dual Splash Lube Blowers)

At the drive end, the bearings are lubricated by the slinger, which must be on the lowest rotor when in a vertical configuration.

Approximate oil sump capacities are listed in Figure 3-2.

NOTICE
Machines are shipped without oil in the sump. Do not operate before adding lubricant.

Lubrication Instructions

Filling procedure
Refer to Figure 3-1. Remove the breather (B) from the drive cover. Add oil to the drive sump until oil reaches the center of the oil level gauge (C). Secure breather (B) in the drive cover.

Add fresh oil as required to maintain proper level. The oil level should be at the middle of the sight glass when the machine is not operating. Refer to Figure 3-2, for approximate oil capacities.

RBS Series, Dual Splash Lube Blower Oil Capacities

Approximate Sump capacity in pints or ounces						
SIZE	HORIZONTAL CONFIGURATION			VERTICAL CONFIGURATION		
	GEARS	DRIVE	TOTAL	GEARS	DRIVE	TOTAL
15-25	0.8 PT (13 oz.)	0.6 PT (11 oz.)	1.5 PT (24 oz.)	0.4 PT (7 oz.)	0.2 PT (4 oz.)	0.6 PT (11 oz.)
35-45-46	1.5 PT (25 oz.)	0.8 PT (13.5 oz.)	2.4 PT (38 oz.)	0.9 PT (15 oz.)	0.5 PT (8 oz.)	1.4 PT (24 oz.)
55-65-66	2.5 PT (40 oz.)	1.2 PT (20 oz.)	3.7 PT (60 oz.)	1.2 PT (20 oz.)	0.6 PT (10 oz.)	1.8 PT (30 oz.)
75-85-86	4.2 PT (67 oz.)	1.8 PT (30 oz.)	6 PT (97 oz.)	1.8 PT (30 oz.)	0.8 PT (13 oz.)	2.7 PT (44 oz.)
95-105-106	7.3 PT (117 oz.)	3.3 PT (53 oz.)	10.7 PT (171 oz.)	3.3 PT (53 oz.)	1.6 PT (27 oz.)	5 PT (81 oz.)
115-125-126	10 PT (161 oz.)	5.8 PT (94 oz.)	15.9 PT (255 oz.)	6.5 PT (104 oz.)	3.7 PT (60 oz.)	10 PT (165 oz.)
135-145-155	22 PT (352 oz.)	12.6 PT (202 oz.)	34.6 PT (554 oz.)	12.6 PT (202 oz.)	7.3 PT (118 oz.)	20 PT (319 oz.)
165-175	37 PT (604 oz.)	21 PT (336 oz.)	58.8 PT (941 oz.)	-	-	-
205-225	63 PT (1008 oz.)	33 PT (538 oz.)	96.6 PT (1546 oz.)	-	-	-

Note: Quantities are for purchase estimates only.

FIGURE 3-2 – APPROXIMATE OIL CAPACITIES

GEAR END LUBRICATION (Dual Splash Lube Blowers)
At the gear end, the timing gear teeth are lubricated by being partially submerged in oil. The gear teeth serve as oil slingers for gear end bearings.

Approximate oil sump capacities are listed in Figure 3-2.

WARNING

Do not overfill as this will tend to cause excessive heating of the gears and may damage the unit.

NOTICE

Machines are shipped without oil in the sump. Do not operate before adding lubricant.

LUBRICATION INSTRUCTIONS

Filling procedure Refer to FIGURE 3-1. Remove the breather (B) from the gear cover. Add oil to the gear case until oil reaches the center of the oil level gauge (C). Secure breather (B) in the gear cover.

Add fresh oil as required to maintain proper level. The oil level should be at the middle of the sight glass when the machine is not operating. Refer to Figure 3-2.for approximate oil capacities.

RECOMMENDED LUBRICANT

AEON PD Synthetic Blower Lubricant is recommended. Refer to FIGURE 3-3, for AEON PD, AEON PD-FG (Food Grade) and AEON PD-XD (Extreme Duty) part numbers. Order AEON PD from your Gardner Denver Distributor or call Gardner Denver directly.

Convenient Package Sizes	AEON PD Part No.	AEON PD-FG Part No.	AEON PD-XD Part No.
1 quart	28G23	28H97	28G46
Case 12 quarts	28G24	28H98	28G47
1 gallon	28G40	28H333	28G42
Case 6 gallons	28G41	28H334	28G43
5 gallon pail	28G25	28H99	28G44
55 gallon drum	28G28	28H100	28G45

FIGURE 3-3 – AEON PD SYNTHETIC LUBRICANT

AEON PD is formulated especially for positive displacement blower service to provide maximum blower protection at any temperature. One fill of AEON PD will last a minimum of 4 times longer than a premium mineral oil. Refer to FIGURE 3-4.

		Ambient Temperatures			
		Less than 10° F	**10°F to 32°F**	**32°F to 90°F**	**Greater than 90°F**
Blower Discharge Temperature	**Less than 32°F**	**AEON PD AEON PD-FG**	**AEON PD AEON PD-FG**		
	32° F to 100° F	**AEON PD AEON PD-FG**	**AEON PD AEON PD-FG**	**AEON PD AEON PD-FG**	
	100° F to 225°F	**AEON PD AEON PD-FG**	**AEON PD AEON PD-FG**	**AEON PD AEON PD-FG**	**AEON PD AEON PD-FG**
	225° F to 300° F	**AEON PD AEON PD-FG**	**AEON PD AEON PD-FG**	**AEON PD AEON PD-FG**	**AEON PD XD**
	Greater than 300°F			**AEON PD XD**	**AEON PD XD**

FIGURE 3-4 – SYNTHETIC LUBRICANT CHART

AEON PD Synthetic Lubricant should be drained after 6000 hours of operation. Re-fill with fresh AEON PD oil. If mineral oil is used, perform the above oil change maintenance every 1500 hours. Recommended service intervals are for normal blower operating conditions. Severe operating conditions may warrant more frequent oil changes. Laboratory analysis of lubricant should be used to help determine the optimum oil change interval.

For best performance and equipment protection, use AEON PD Synthetic Lubricant, which has been specifically formulated for positive displacement blowers.

NOTICE
Flush the oil whenever a change is made from one type of oil to another.

Drain the current lubricant as thoroughly as possible. Refill with the new lubricant. Fill to normal level of the blower, which is at the middle of the sight glass when the machine is not operating. Run the blower for one hour. Shut off the blower and drain the lubricant completely. Refill the blower again with the new lubricant.

SECTION 4
OPERATION

Future operating problems can be avoided if proper precautions are observed when the equipment is first put into service.

Before starting under power, the blower should be turned over by hand to make certain there is no binding or internal contact.

Each size blower has limits on pressure differential, running speed and discharge temperature which must not be exceeded. These limits are shown in “Maximum Operating Limitations”, FIGURE 4-1, below.

⚠WARNING

Operating beyond the specified operating limitations will result in damage to the unit.

It is important that the pressures and temperatures are measured directly at the ports of the blower to avoid error that may be caused by intervening pipe runs, fittings, etc.

Relief valves must be used to protect against excessive pressure or vacuum conditions. These valves should be tested at initial startup to be sure they are adjusted to relieve at or below the maximum pressure differential rating of the blower.

NOTICE

Relief valves should be placed as close as possible to the blower inlet or discharge.

In some instances, pressure may be relieved at a lower point than the blower maximum in order to protect the motor or the equipment served by the blower.

Discharge temperature switches are recommended to protect against excessive inlet restriction or inlet temperatures. Check valves in the discharge line on pressure blowers and in the inlet line on vacuum blowers are recommended to protect the blower from motoring backwards when shut down under load.

LIMITATIONS

For information regarding limitations, refer to FIGURE 4-1, below.

Size	RPM		P1 (psi)		P2-P1 (psi)	T1 (<°F)		T2 (<°F)	T2-T1 (<°F)
	MAX	MIN (1)	MAX	MIN	MAX	MAX	MIN	MAX	MAX
15	5000	1200	15.95	2.9	13.05	122	-13	266	230
25					10.15				194
35	5000	1000	15.95	2.9	14.5	122	-13	302	266
45					14.5				230
46					10.15				194
55	4800	900	15.95	2.9	14.5	122	-13	302	266
65					1.45				230
66					10.15				194
75	3800	700	15.95	2.9	14.5	122	-13	302 (2)	266
85					14.5				230
86					10.15				194
95	3000	550	15.95	2.9	14.5	122	-13	302 (2)	266
105					14.5				230
106					10.15				194

115	2400	450	15.95	2.9	14.5	122	-13	302 (2)	266
125					14.5				230
126					10.15				194
135	1800	350	15.95	2.9	14.5	122	-13	302 (2)	266
145	2000				14.5				230
155					10.15				194
165	1500	300	15.95	2.9	14.5	122	-13	302 (2)	266
175					14.5				230
205	1200	250	15.95	2.9	14.5	122	-13	302 (2)	230
225					10.15				194

DO NOT EXCEED THESE LIMITS

NOTICE
Blower speed, line losses, elevation, and increased inlet temperatures will affect the maximum operating limitations. The minimum RPM for the blowers is based on lubrication only. The blowers may only be operated down to the minimum RPM, when the temperature rise and discharge temperature are below the maximum limitations as shown.

FIGURE 4-1 – MAXIMUM / MINIMUM OPERATING LIMITATIONS

(1) Resonance phenomena in the plant are possible when the rotation speed is close to the minimum.
(2) 320°F for blowers /R-V

4.1 Flow adjustment

Change transmission ratio
Change frequency of the motor
Use a two-speed motor
Discharge excess flow and silence it

WARNING
Do not use relief valve to discharge excess flow Do not recirculate flow to blower inlet. Do not adjust flow by throttling inlet or outlet pipe

4.2 Noise level

Noise level of the blower is indicated at page 4 as Sound Pressure Level according to ISO 3476 at 1m distance from the blower and in free air (tolerance+/- 2dB(A))

WARNING
For high compression ratio and for high speed of rotation noise level of blower can be higher than 85 dB(A)

BLOWER STARTUP CHECKLIST

This startup procedure should be followed during the initial installation and after any shutdown periods or after the blower has been worked on or moved to new location. It is suggested that the steps be followed in sequence and checked off (√) in the boxes provided.

- ☐ 1. Check the unit and all piping for foreign material and clean if required.
- ☐ 2. Check the flatness of the feet and the alignment of the drive. Feet that are bolted down in a bind can cause housing distortion and internal rubbing. Misaligned V-drives can cause the rotors to rub against the headplates and cause a reduction in the volumetric efficiency of the unit. Misaligned couplings can ruin bearings.
- ☐ 3. If the blower is V-belt driven, check the belt tension and alignment. Over-tensioned belts create heavy bearing/shaft loads which lead to premature failure.
- ☐ 4. Be sure adequate drive guards are in place to protect the operator from severe personal injury and incidental contact.
- ☐ 5. Check the unit for proper lubrication. Proper oil level cannot be over-emphasized. Too little oil will ruin bearings and gears. Too much oil will cause overheating and can ruin gears and cause other damage. Insure that grease lubricated bearings are properly lubricated.
- ☐ 6. With motor electrical power locked out and disconnected, turn the drive shaft by hand to be certain the impellers do not bind.
- ☐ 7. “Jog” the unit with the motor a few times to check that rotation is in the proper direction, and to be certain it turns freely and smoothly.
- ☐ 8. The internal surfaces of all RBS units are mist sprayed with a rust preventive to protect the machine during the shipping and installation period. This film should be removed upon initial startup.
- ☐ 9. Start the unit and operate 15 minutes at no load. During this time, check for hot spots and other indications of interference.
- ☐ 10. Apply the load and observe the operation of the unit for one hour. Check frequently during the first day of operation.
- ☐ 11. If malfunctions occur, do not continue to operate. Problems such as knocking rotors can cause serious damage if the unit is operated without correction.

SAFETY PRECAUTIONS

1. Do not operate blower with open inlet or outlet port.
2. Do not exceed specified vacuum or pressure limitations.
3. Do not operate above or below recommended blower speed range.
4. Blower is not to be used where non-sparking equipment is specified.
5. Do not operate without belt guard or coupling shield.

WARNING
Do not exceed sheave or coupling manufacturer's rim speed limit.

6. The blower and blower discharge piping may be extremely hot and cause skin burns on contact.

TROUBLE SHOOTING

No matter how well the equipment is designed and manufactured, there may be times when servicing will be required due to normal wear, the need for adjustment, or various external causes. Whenever equipment needs attention, the operator or repairman should be able to locate the cause and correct the trouble quickly. The Trouble Shooting Chart below is provided to assist the mechanic in those respects.

PROBLEM	POSSIBLE CAUSES	SOLUTION
Knocking	1. Unit out of time. 2. Distortion due to improper mounting or pipe strains. 3. Excessive pressure differential. 4. Worn gears. 5. Worn bearings.	1. Re-time impellers 2. Check mounting alignment and relieve pipe strains. 3. Reduce to manufacturer's recommended pressure. Examine relief valve, re-set if necessary. 4. Replace timing gears. 5. Replace bearings..
Excessive blower temperature.	1. Too much oil in gear case. 2. Too low operating speed. 3. Dirty air Filter. 4. Clogged filter or muffler. 5. Excessive pressure differential. 6. Worn impeller clearances. 7. Internal contact.	1. Reduce oil level. 2. Increase blower speed. 3. Clean or replace air filter 4. Remove cause of obstruction. 5. Reduce pressure differential across the blower. 6. Replace impeller. 7. Correct clearances.
Impeller end or tip drag.	1. Insufficient assembled clearances. 2. Case or frame distortion. 3. Excessive operating pressure. 4. Excessive operating temperature.	1. Correct clearances. 2. Check mounting and pipe strain. 3. Remove cause. 4. Remove cause
Lack of volume.	1. Slipping belts. 2. Worn clearances. 3. Dirty air filter	1. Tighten belts. 2. Re-establish proper clearances. 3. Clean or replace air filter.
Excessive bearing or gear wear.	1. Improper lubrication.	1. Correct lubrication level. Replace dirty oil.
Loss of oil.	1. Headplate, gear case or drive cover vents plugged. 2. Worn Seal.	1. Clean vents. 2. Replace seals.

FIGURE 5-1 – MAINTENANCE CHECK LIST

	FREQUENCY																										
	Daily			weekly			3 weeks			6 weeks			12 weeks			24 weeks			36 weeks			52 weeks		
Duty Cycle: See notes	Light	Standard	Extreme	Light	Standard	Extreme	Light	Standard	Extreme	Light	Standard	Extreme	Light	Standard	Extreme	Light	Standard	Extreme	Light	Standard	Extreme	Light	Standard	Extreme
Bare Blower																								
Lube level	■	■	■																					
Lube Sample*						■				■	■	■												
Lube change** 1* 2*															1*			2*		■		■	■	
Grease ***								■	■				■											
Lube flush**** 1* 2*															1*			2*				■	■	■
Lube Temperature	■	■	■																					
Discharge Temperature	■	■	■																					
Discharge Pressure	■	■	■																					
Vibration										■	■	■												
System Components***																								
Air filter Inspect				■	■	■																		
Air filter Change****** 1* 2*												1*			2*					■		■		
Expansion Joint Inspect																								
Silencer Inspect																		■				■	■	■
Check valve inspect																		■	■	■				
Check valve Test										■	■	■												
PRV inspect																						■	■	■
PRV Test										■	■	■												

Duty Cycle: The intervals stated are general recommendations and should be adjusted for actual site conditions.
Light: 8-10hr day 40hr week
Standard:8-24hr day 40-168hr week
Extreme: 8-24hr day 40-168hr week High/Low Ambient Temperature , Humidity and Altitude; High Environmental Contaminates; High cycling of system pressure/flow

*Lube Sample: A lube sampling program is the recommended method of determining lubricant life.
**Lube Change: The lube change intervals are based on Aeon PD lubricants and greases.
Minimum 52 week change may vary dependant upon process or environmental conditions and lube sample results
Note: Duty Cycle may not accrue 6000hrs at 52 weeks . Extreme Duty (1*& 2*) may require increased frequency dependant upon lube sample results
*** Grease: Do Not Over Grease ensure that grease vents are clear to expel contaminated grease
Note: Not all models have grease lube bearings
****Lube Flush: Periodic cleaning of lube sumps and grease vents is required to remove accumulated contaminates
Note: Extreme Duty (1*& 2*) may require increased frequency dependant upon Lube Sample results
*****System Components: System components are not typically supplied by Gardner Denver.
Note: Contact the system component provider or packager for appropriate service intervals.
******Air Filter Change: The air filter change interval is dependant upon environmental conditions.
Note: Extreme Duty (1*& 2*) may require increased frequency dependant upon filter element differential pressure

SECTION 6
DISASSEMBLY AND ASSEMBLY INSTRUCTIONS

Disassembly the blower within the guarantee period results in the cancellation of the guarantee.
Disassembly, repair work and reassembling of the blower must be carried out only by qualified personnel and with the aid of suitable equipment and relevant manual.
This manual provides both the assembly and disassembly operations necessary for ordinary maintenance.
For any references to components see the drawings at pages 29.

NOTICE
Warranty does not cover damages caused by operations carried out incorrectly during disassembly and/or reassembling of the blower.

DISASSEMBLY

WARNING
Before starting disassembly stop the blower by following the procedure described at paragraph 6

PREPARATION OF THE BLOWER

Disassemble the drive components (pulleys, coupling) following manufacturer's instructions if there are locking devices or by means of an extractor if attached directly onto the shaft.

WARNING
Do not hammer the shaft coupling or pulley

WARNING
Dispose the used oil in accordance with local regulations

DISASSEMBLY OF DRIVE SIDE SUMP
Remove the key 30.
Fix the side cover 5A by four clamps at least.
Loose the fixing screws and extract the sump 12A and extract it.

Reassembling
Before reassembling, thoroughly clean all components and lubricate with oil those components, which have to slide over each other

Reassembling of drive side sump

Lubricate the lip of the seal and sliding housing on the shaft with grease
Mount the sump 12A on the cover SA with a new gasket 50 in between.

⚠ WARNING
Do not damage the lip of the ring 43 or the seal faces of the mechanical seal for /TMS version

Secure the sump 12A with the relevant screws.

REINSTALL THE BLOWER

Couple the motor as shown in paragraph 4.4.1 04.4.2
Refill the sump 12A with new lubricating oil as per paragraph 6.1.2.

7.1 RBS 15-25 Sectional drawing, **FIGURE 7-1**

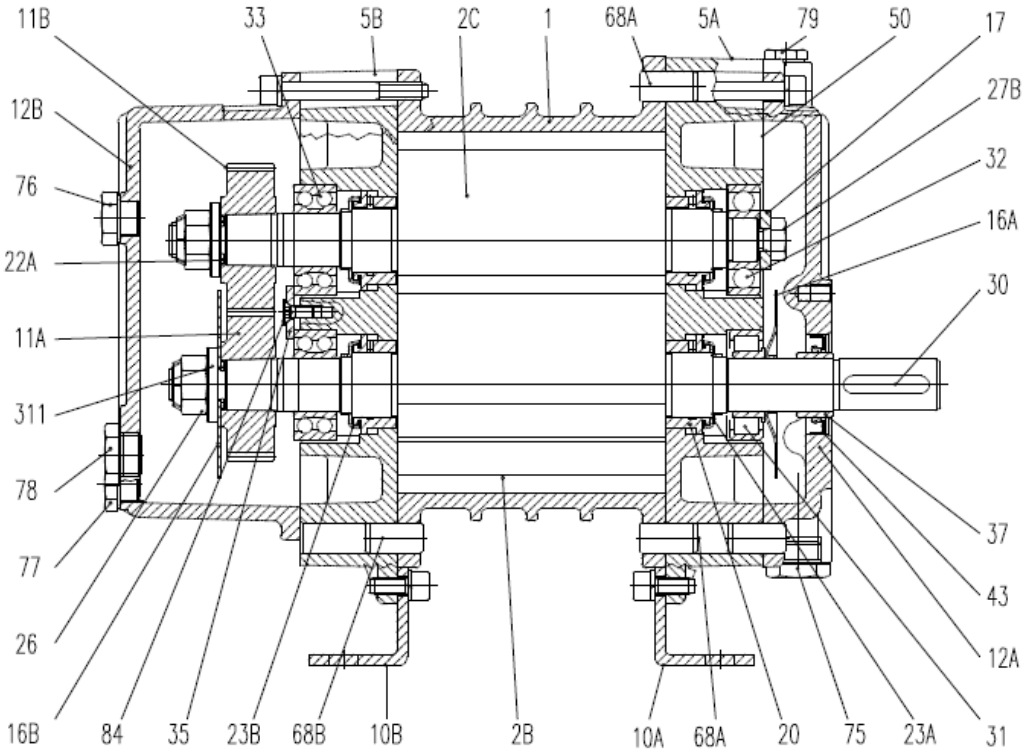

Item	Description	Qty.	**RBS 15** Part Number	**RBS 25** Part Number
1	CASING	1	RB3204510301	RB3204520301
2B	SHAFT+ROTOR P.	1	RB3195680305	RB3195700305
2C	SHAFT+ROTOR S.	1	RB3195690305	RB3195710305
5A	COVER DRIVE SIDE	1	RB3215430301	RB3215430301
5B	COVER DRIVEN SIDE	1	RB3215430301	RB3215430301
11A	DRIVING GEAR	1	RB3117540108	RB3117540108
11B	DRIVEN GEAR	1	RB3117540108	RB3117540108
12A	OIL SUMP DRIVE END	1	RB3167140301	RB3167140301
12B	OIL SUMP NON DRIVE END	1	RB3312160301	RB3312160301
16A	LUBRICATING DISK – DRIVE	1	RB3152011203	RB3152011203
16B	LUBRICATING DISK – DRIVEN	1	RB3125791203	RB3125791203
17	BEARING LOCK DISK	1	RB3152701240	RB3152701240
20	SEALING CHAMBER	4	RB3209830310	RB3209830310
23A	OIL SPLASH DISK	2	RB3195721204	RB3195721204
23B	OIL SPLASH DISK	2	RB3195721204	RB3195721204
26	LOCK NUT	2	RB1595600172	RB1595600172
27B	SCREW	1	RB1525000116	RB1525000116
30	KEY 'A'	1	RB1805510124	RB1805510124
31	BEARING	1	RB3000440100	RB3000440100
32	BEARING	1	RB1502100100	RB1502100100
33	BEARING	2	RB3000460100	RB3000460100
35	BEARING PLATE	1	RB3152070100	RB3152070100
35B	SHAFT PROTECTION	1	RB3158871051	RB3158871051
37	INTERNAL RING	1	RB2022930100	RB2022930100
43	SEAL RING	1	RB3008480954	RB3008480954
50	GASKET	2	RB3159671005	RB3159671005
68A	PIN	4	RB3140070124	RB3140070124
68B	PIN	2	RB3140070124	RB3140070124
72	PLUG	2	RB1530000309	RB1530000309
75	PLUG	1	RB2035391006	RB2035391006
75C	PLUG	1	RB1518700901	RB1518700901
76	PLUG	1	RB1519000901	RB1519000901
77	PLUG	1	RB1519700901	RB1519700901
78	PLUG	1	RB2035391006	RB2035391006
79	PLUG	2	RB2022880901	RB2022880901

7.2 RBS 35-106 Sectional drawing, **FIGURE 7-2**

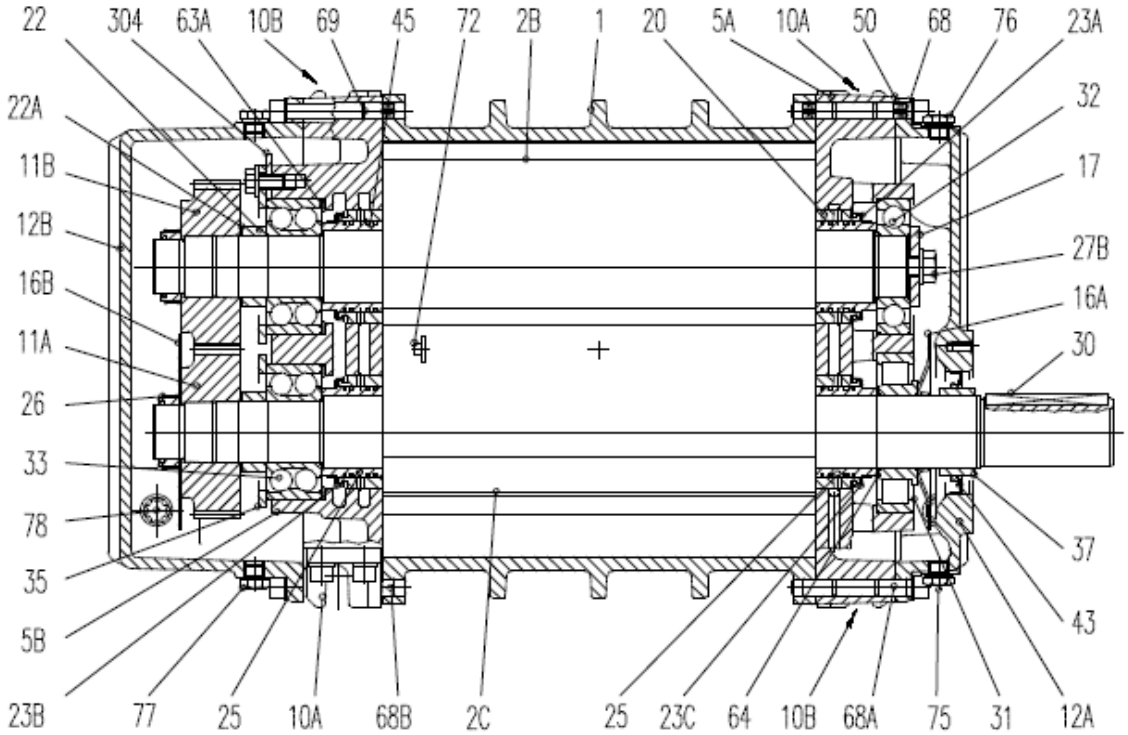

Item	Description	Qty.	RBS 35 Part Number	RBS 45 Part Number	RBS 46 Part Number	RBS 55 Part Number	RBS 65 Part Number	RBS 66 Part Number
1	CASING	1	RB3175780301	RB3210300301	RB3210310301	RB3166260301	RB3181710301	RB3181720301
2B	SHAFT+ROTOR P.	1	RB3202400305	RB3202420305	RB3202440305	RB3263010305	RB3263030305	RB3263050305
2C	SHAFT+ROTOR S.	1	RB3202390305	RB3202410305	RB3202430305	RB3263020305	RB3263040305	RB3263060305
5A	COVER DRIVE SIDE	1	RB3202130301	RB3202130301	RB3202130301	RB3188600301	RB3188600301	RB3188600301
5B	COVER DRIVEN SIDE	1	RB3123660301	RB3123660301	RB3123660301	RB3188610301	RB3188610301	RB3188610301
11A	DRIVING GEAR	1	RB3176720108	RB3176720108	RB3176720108	RB3182550108	RB3182550108	RB3182550108
11B	DRIVEN GEAR	1	RB3176730108	RB3176730108	RB3176730108	RB3182560108	RB3182560108	RB3182560108
12A	OIL SUMP DRIVE END	1	RB3202330301	RB3202330301	RB3202330301	RB3188620301	RB3188620301	RB3188620301
12B	OIL SUMP NON DRIVE END	1	RB3312170301	RB3312170301	RB3312170301	RB3312180301	RB3312180301	RB3312180301
16A	LUBRICATING DISK – DRIVE	1	RB3199401203	RB3199401203	RB3199401203	RB3186521203	RB3186521203	RB3186521203
16B	LUBRICATING DISK – DRIVEN	1	RB3135821203	RB3135821203	RB3135821203	RB3182591203	RB3182591203	RB3182591203
17	BEARING LOCK DISK	1	RB3050770109	RB3050770109	RB3050770109	RB3192730100	RB3192730100	RB3192730100
20	SEALING CHAMBER	4	RB3077670318	RB3077670318	RB3077670318	RB3077680318	RB3077680318	RB3077680318
22	GEAR SPACER	2	RB3135830157	RB3135830157	RB3135830157	RB3182640157	RB3182640157	RB3182640157
23A	OIL SPLASH DISK	1	RB3050791204	RB3050791204	RB3050791204	RB3051201204	RB3051201204	RB3051201204
23B	OIL SPLASH DISK	2	RB3050791204	RB3050791204	RB3050791204	RB3051201204	RB3051201204	RB3051201204
23C	OIL SPLASH DISK	1	RB3050791204	RB3050791204	RB3050791204	RB3051201204	RB3051201204	RB3051201204
25	SEALING SPACER	4	RB3202501252	RB3202501252	RB3202501252	RB3262480310	RB3262480310	RB3262480310
26	LOCK NUT	2	RB3005420125	RB3005420125	RB3005420125	RB1506000125	RB1506000125	RB1506000125
27B	SCREW	2	RB1524400116	RB1524400116	RB1524400116	RB1526900116	RB1526900116	RB1526900116
30	KEY 'A'	1	RB1529100124	RB1529100124	RB1529100124	RB1529300124	RB1529300124	RB1529300124
31	BEARING	1	RB2041610100	RB2041610100	RB2041610100	RB2035190100	RB2035190100	RB2035190100
32	BEARING	1	RB1503000100	RB1503000100	RB1503000100	RB1502400100	RB1502400100	RB1502400100
33	BEARING	1	RB2046180100	RB2046180100	RB2046180100	RB1504400100	RB1504400100	RB1504400100
35	BEARING COVER	2	RB3098000141	RB3098000141	RB3098000141	RB3183150141	RB3183150141	RB3183150141
35B	SHAFT PROTECTION	2	RB3202071051	RB3202071051	RB3202071051	RB3183401051	RB3183401051	RB3183401051
37	INTERNAL RING	1	RB2038620100	RB2038620100	RB2038620100	RB2033490100	RB2033490100	RB2033490100
43	SEAL RING	1	RB1987640954	RB1987640954	RB1987640954	RB1978220954	RB1978220954	RB1978220954
45	FLEXIBLE RING	1	RB1516100308	RB1516100308	RB1516100308	RB1516200308	RB1516200308	RB1516200308
50	GASKET	16	RB1964741005	RB1964741005	RB1964741005	RB1978031005	RB1978031005	RB1978031005
63A	COMP. RING	2	RB1993790145	RB1993790145	RB1993790145	RB1993800145	RB1993800145	RB1993800145
64	COMP. RING	6	RB2038630145	RB2038630145	RB2038630145	RB2012570145	RB2012570145	RB2012570145
68A	PIN	1	RB3098080124	RB3098080124	RB3098080124	RB3098080124	RB3098080124	RB3098080124
68B	PIN	4	RB3098080124	RB3098080124	RB3098080124	RB3098080124	RB3098080124	RB3098080124
72	PLUG	2	RB1530000309	RB1530000309	RB1530000309	RB1530000309	RB1530000309	RB1530000309
75	PLUG	2	RB2035010901	RB2035010901	RB2035010901	RB2035010901	RB2035010901	RB2035010901
76	PLUG	1	RB1518700901	RB1518700901	RB1518700901	RB1518700901	RB1518700901	RB1518700901
77	PLUG	3	RB1519700901	RB1519700901	RB1519700901	RB1519800901	RB1519800901	RB1519800901
78	PLUG	4	RB2035391006	RB2035391006	RB2035391006	RB2035391006	RB2035391006	RB2035391006
79	PLUG	2	RB2009420901	RB2009420901	RB2009420901			

Item	Description	Qty.	RBS 75 Part Number	RBS 85 Part Number	RBS 86 Part Number	RBS 95 Part Number	RBS 105 Part Number	RBS 106 Part Number
1	CASING	1	RB3272480301	RB3181510301	RB3181520301	RB3128190301	RB3206470301	RB3206480301
2B	SHAFT+ROTOR P.	1	RB3181240305	RB3181260305	RB3181280305	RB3206490305	RB3206510305	RB3206530305
2C	SHAFT+ROTOR S.	1	RB3181230305	RB3181250305	RB3181270305	RB3206500305	RB3206520305	RB3206540305
5A	COVER DRIVE SIDE	1	RB3188630301	RB3188630301	RB3188630301	RB3206440301	RB3206440301	RB3206440301
5B	COVER DRIVEN SIDE	1	RB3188640301	RB3188640301	RB3188640301	RB3206460301	RB3206460301	RB3206460301
11A	DRIVING GEAR	1	RB3182570108	RB3182570108	RB3182570108	RB3206310108	RB3206310108	RB3206310108
11B	DRIVEN GEAR	1	RB3182580108	RB3182580108	RB3182580108	RB3206320108	RB3206320108	RB3206320108
12A	OIL SUMP DRIVE END	1	RB3188650301	RB3188650301	RB3188650301	RB3206420301	RB3206420301	RB3206420301
12B	OIL SUMP NON DRIVE END	1	RB3312190301	RB3312190301	RB3312190301	RB3312200301	RB3312200301	RB3312200301
16A	LUBRICATING DISK – DRIVE	1	RB3183421203	RB3183421203	RB3183421203	RB3205951203	RB3205951203	RB3205951203
16B	LUBRICATING DISK – DRIVEN	1	RB3182601203	RB3182601203	RB3182601203	RB3206351203	RB3206351203	RB3206351203
17	BEARING LOCK DISK	1	RB3182630109	RB3182630109	RB3182630109	RB3206360109	RB3206360109	RB3206360109
20	SEALING CHAMBER	4	RB3077690318	RB3077690318	RB3077690318	RB3205880318	RB3205880318	RB3205880318
22	GEAR SPACER	2	RB3182650157	RB3182650157	RB3182650157	RB3206340157	RB3206340157	RB3206340157
23A	OIL SPLASH DISK	1	RB3052241204	RB3052241204	RB3052241204	RB3205911204	RB3205911204	RB3205911204
23B	OIL SPLASH DISK	2	RB3052241204	RB3052241204	RB3052241204	RB3205911204	RB3205911204	RB3205911204
23C	OIL SPLASH DISK	1	RB3052241204	RB3052241204	RB3052241204	RB3205911204	RB3205911204	RB3205911204
25	SEALING SPACER	4	RB3182670310	RB3182670310	RB3182670310	RB3253100301	RB3253100301	RB3253100301
26	LOCK NUT	2	RB1937640125	RB1937640125	RB1937640125	RB1506300125	RB1506300125	RB1506300125
27B	SCREW	1	RB1524600116	RB1524600116	RB1524600116	RB1524600116	RB1524600116	RB1524600116
30	KEY 'A'	1	RB1529400124	RB1529400124	RB1529400124	RB1805490124	RB1805490124	RB1805490124
31	BEARING	1	RB2077930100	RB2077930100	RB2077930100	RB2077950100	RB2077950100	RB2077950100
32	BEARING	1	RB2032920100	RB2032920100	RB2032920100	RB1503200100	RB1503200100	RB1503200100
33	BEARING	2	RB2032930100	RB2032930100	RB2032930100	RB1505000100	RB1505000100	RB1505000100
35	BEARING COVER	2	RB3183160141	RB3183160141	RB3183160141	RB3206330141	RB3206330141	RB3206330141
35B	SHAFT PROTECTION	1	RB3183411051	RB3183411051	RB3183411051	RB3206371051	RB3206371051	RB3206371051
37	INTERNAL RING	1	RB2033500100	RB2033500100	RB2033500100	RB3256110100	RB3256110100	RB3256110100
43	SEAL RING	2	RB2033510954	RB2033510954	RB2033510954	RB1891180954	RB1891180954	RB1891180954
45	FLEXIBLE RING	16	RB1516300308	RB1516300308	RB1516300308	RB3253090308	RB3253090308	RB3253090308
50	GASKET	2	RB1937601005	RB1937601005	RB1937601005	RB2200241005	RB2200241005	RB2200241005
63A	COMP. RING	6	RB2018270145	RB2018270145	RB2018270145	RB2309610145	RB2309610145	RB2309610145
64	COMP. RING	1	RB2033520145	RB2033520145	RB2033520145	RB2012330145	RB2012330145	RB2012330145
68	PIN	2	RB3140060124	RB3140060124	RB3140060124	RB3128490124	RB3128490124	RB3128490124
68A	PIN	2	RB3140070124	RB3140070124	RB3140070124	RB3119740124	RB3119740124	RB3119740124
68B	PIN	1	RB3140070124	RB3140070124	RB3140070124	RB3119740124	RB3119740124	RB3119740124
69	PIN	1	RB3140060124	RB3140060124	RB3140060124	RB3128490124	RB3128490124	RB3128490124
72	PLUG	2	RB1530000309	RB1530000309	RB1530000309	RB1530000309	RB1530000309	RB1530000309
76	PLUG	2	RB2011510901	RB2011510901	RB2011510901	RB2011510901	RB2011510901	RB2011510901
77	PLUG	2	RB2054010901	RB2054010901	RB2054010901	RB1519800901	RB1519800901	RB1519800901
77A	PLUG	2	RB1519700901	RB1519700901	RB1519700901	RB2054010901	RB2054010901	RB2054010901
78	PLUG	4	RB1519301006	RB1519301006	RB1519301006	RB1519301006	RB1519301006	RB1519301006
79	PLUG	2	RB2011300901	RB2011300901	RB2011300901	RB2011300901	RB2011300901	RB2011300901

7.3 RBS 115-225 Sectional drawing, **FIGURE 7-3**

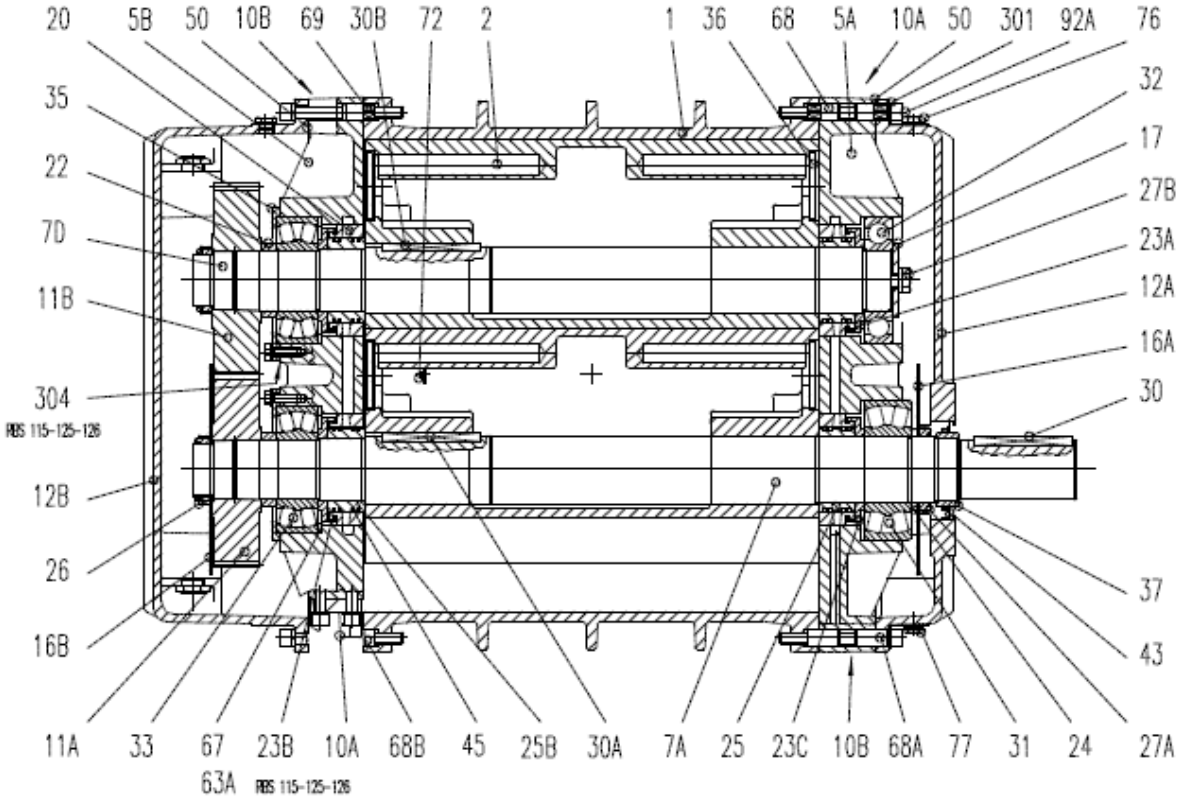

Item	Description	Qty.	RBS 115 Part Number	RBS 125 Part Number	RBS 135 Part Number	RBS 145 Part Number
1	CASING	1	RB3129280301	RB3191850301	RB3166290301	RB3194560301
2	SHAFT+ROTOR P.	1	RBAR3186160001	RBAR3186180001	RBAR3186380001	RBAR3186400001
2	SHAFT+ROTOR S.	1	RBAR3186170001	RBAR3186190001	RBAR3186390001	RBAR3186410001
5A	COVER DRIVE SIDE	1	RB3186740301	RB3186740301	RB3186770301	RB3186770301
5B	COVER DRIVEN SIDE	1	RB3163020301	RB3163020301	RB3186780301	RB3186780301
11A	DRIVING GEAR	1	RB3176800108	RB3176800108	RB3186470108	RB3186470108
11B	DRIVEN GEAR	1	RB3176810108	RB3176810108	RB3186480108	RB3186480108
12A	OIL SUMP DRIVE END	1	RB3186750301	RB3186750301	RB3312250301	RB3312250301
12B	OIL SUMP NON DRIVE END	1	RB3312210301	RB3312210301	RB3312220301	RB3312220301
16A	LUBRICATING DISK – DRIVE	1	RB3186271203	RB3186271203	RB2001781203	RB2001781203
16B	LUBRICATING DISK – DRIVEN	1	RB1311101203	RB1311101203	RB1403301203	RB1403301203
17	BEARING LOCK DISK	1	RB3092870109	RB3092870109	RB3135300109	RB3135300109
20	SEALING CHAMBER	4	RB2000600318	RB2000600318	RB3189300318	RB3189300318
22	GEAR SPACER	2	RB3126420157	RB3126420157	RB3135290157	RB3135290157
23A	OIL SPLASH DISK	1	RB3092861204	RB3092861204	RB3198661204	RB3198661204
23B	OIL SPLASH DISK	2	RB3092861204	RB3092861204	RB3198661204	RB3198661204
23C	OIL SPLASH DISK	1	RB3092861204	RB3092861204	RB3198661204	RB3198661204
24	SPACER - LUBRICATING DISK	1	RB3186280157	RB3186280157	RB3014790157	RB3014790157
25	SEALING SPACER	2	RB3250850301	RB3250850301	RB3203150301	RB3203150301
25B	SEALING SPACER	2	RB3250860301	RB3250860301	RB3203160301	RB3203160301
26	LOCK NUT	2	RB1507400125	RB1507400125	RB1507000125	RB1507000125
27A	LOCK NUT	1	RB1982930125	RB1982930125	RB2034020125	RB2034020125
27B	SCREW	1	RB1998670116	RB1998670116	RB1998670116	RB1998670116
30	KEY 'A'	1	RB1920210124	RB1920210124	RB1501000124	RB1501000124
31	BEARING	1	RB1830760100	RB1830760100	RB1504000100	RB1504000100
32	BEARING	1	RB1918970100	RB1918970100	RB3005370100	RB3005370100
33	BEARING	2	RB1504600100	RB1504600100	RB1504700100	RB1504700100
35	BEARING COVER	2	RB3126440301	RB3126440301	RB3179310301	RB3179310301
35B	SHAFT PROTECTION	1	RB3124151051	RB3124151051	RB3124161051	RB3124161051
36	ROTOR CAP	12	RB3229821205	RB3229821205	RB3150441205	RB3150441205
37	INTERNAL RING	1	RB3256270100	RB3256270100	RB3256280100	RB3256280100
43	SEAL RING	1	RB1628200954	RB1628200954	RB1498300954	RB1498300954
45	FLEXIBLE RING	16	RB3250840308	RB3250840308	RB1516600308	RB1516600308
50	GASKET	2	RB2300261005	RB2300261005	RB2300951005	RB2300951005
63A	COMP. RING	8	RB2018570145	RB2018570145	RB3186490100	RB3186490100
68	PIN	2	RB3128490124	RB3128490124	RB3125290124	RB3125290124
68A	PIN	2	RB3119740124	RB3119740124	RB3125240124	RB3125240124
68B	PIN	1	RB3119740124	RB3119740124	RB3125240124	RB3125240124
69	PIN	1	RB3128490124	RB3128490124	RB3125290124	RB3125290124
72	PLUG	2	RB1530000309	RB1530000309	RB1530000309	RB1530000309
76	PLUG	2	RB1518900901	RB1518900901	RB1518900901	RB1518900901
77	PLUG	4	RB1519800901	RB1519800901	RB1519800901	RB1519800901
78	PLUG	4	RB1519401006	RB1519401006	RB1519401006	RB1519401006
79	PLUG	2	RB2026730901	RB2026730901	RB2026730901	RB2026730901

Item	Description	Qty.	RBS 155 Part Number	RBS 165 Part Number	RBS 175 Part Number	RBS 205 Part Number	RBS 225 Part Number
1	CASING	1	RB3194570301	RB3163390301	RB3242100301	RB3255340301	RB3312310301
2	SHAFT+ROTOR P.	1	RBAR3186420001	RBAR3245220001	RBAR3245240001	RBAR3245260001	RBAR3245280001
2	SHAFT+ROTOR S.	1	RBAR3186430001	RBAR3245230001	RBAR3245250001	RBAR3245270001	RBAR3245290001
5A	COVER DRIVE SIDE	1	RB3186770301	RB3188960301	RB3188960301	RB3206850301	RB3206850301
5B	COVER DRIVEN SIDE	1	RB3186780301	RB3188970301	RB3188970301	RB3206860301	RB3206860301
11A	DRIVING GEAR	1	RB3186470108	RB3189240108	RB3189240108	RB3207210108	RB3207210108
11B	DRIVEN GEAR	1	RB3186480108	RB3189250108	RB3189250108	RB3207220108	RB3207220108
12A	OIL SUMP DRIVE END	1	RB3312250301	RB3312260301	RB3312260301	RB3312270301	RB3312270301
12B	OIL SUMP NON DRIVE END	1	RB3312220301	RB3312230301	RB3312230301	RB3312240301	RB3312240301
16A	LUBRICATING DISK – DRIVE	1	RB2001781203	RB2202540955	RB2202540955	RB2201020955	RB2201020955
16B	LUBRICATING DISK – DRIVEN	1	RB1403301203	RB3140470955	RB3140470955	RB3150090955	RB3150090955
17	BEARING LOCK DISK	1	RB3135300109				
20	SEALING CHAMBER	4	RB3189300318	RB3189170318	RB3189170318	RB3206660318	RB3206660318
22	GEAR SPACER	2	RB3135290157	RB3140500157	RB3140500157	RB3150070157	RB3150070157
23A	OIL SPLASH DISK	1	RB3198661204	RB2200690955	RB2200690955	RB2200870955	RB2200870955
23B	OIL SPLASH DISK	2	RB3198661204	RB2200690955	RB2200690955	RB2200860955	RB2200860955
23C	OIL SPLASH DISK	1	RB3198661204	RB2200680955	RB2200680955	RB2200870955	RB2200870955
24	SPACER - LUBRICATING DISK	1	RB3014790157	RB3014790157	RB3014790157	RB3150460109	RB3150460109
24A	SPACER - LUBRICATING DISK	1				RB2001710157	RB2001710157
25	SEALING SPACER	2	RB3203150301	RB3245160301	RB3245160301	RB3245170301	RB3245170301
25B	SEALING SPACER	2	RB3203160301	RB3245390301	RB3245390301	RB3245400301	RB3245400301
26	LOCK NUT	2	RB1507000125	RB3005950125	RB3005950125	RB2022590125	RB2022590125
27A	LOCK NUT	1	RB2034020125	RB1507300100	RB1507300100	RB1981830100	RB1981830100
27B	SCREW	1	RB1998670116	RB1888680100	RB1888680100	RB1981830100	RB1981830100
30	KEY 'A'	1	RB1501000124	RB1805500124	RB1805500124	RB1981840124	RB1981840124
31	BEARING	1	RB1504000100	RB3003290100	RB3003290100	RB3005360100	RB3005360100
32	BEARING	1	RB3005370100	RB1504000100	RB1504000100	RB3008090100	RB3008090100
33	BEARING	2	RB1504700100	RB1504000100	RB1504000100	RB1502000100	RB1502000100
35	BEARING COVER	2	RB3179310301	RB1981410955	RB1981410955	RB1981370955	RB1981370955
35B	SHAFT PROTECTION	1	RB3124161051	RB3150451205			
36	ROTOR CAP	12	RB3150441205	RB2002600108	RB3150451205	RB3150451205	RB3150451205
37	INTERNAL RING	1	RB3256280100	RB2039200954	RB2002600108	RB2005980108	RB2005980108
43	SEAL RING	1	RB1498300954	RB3245300308	RB2039200954	RB1981810954	RB1981810954
45	FLEXIBLE RING	16	RB1516600308	RB2300871005	RB3245300308	RB3245310308	RB3245310308
50	GASKET	2	RB2300951005	RB2021310145	RB2300871005	RB2300861005	RB2300861005
63A	COMP. RING	8	RB3186490100	RB3186800100	RB2021310145	RB2054950145	RB2054950145
67	REGOLATION RING				RB3186800100	RB3206840100	RB3206840100
68	PIN	2	RB3125290124	RB3140520124	RB3140520124	RB3140520124	RB3140520124
68A	PIN	2	RB3125240124	RB3140530124	RB3140530124	RB3140530124	RB3140530124
68B	PIN	1	RB3125240124	RB3140530124	RB3140530124	RB3140530124	RB3140530124
69	PIN	1	RB3125290124	RB3140520124	RB3140520124	RB3140520124	RB3140520124
72	PLUG	2	RB1530000309	RB1530000309	RB1530000309	RB1530000309	RB1530000309
76	PLUG	2	RB1518900901	RB1518900901	RB1518900901	RB1518900901	RB1518900901
77	PLUG	4	RB1519800901	RB1519900901	RB1519900901	RB1519900901	RB1519900901
78	PLUG	4	RB1519401006	RB1836851006	RB1836851006	RB1836851006	RB1836851006
79	PLUG	2	RB2026730901				

OVERHAUL KIT

RBS 15-25

Kit	300RBS6010		
Postion	**Part Number**	**Description**	**Qty**
23A	RB3195721204	OIL SPLASH DISK	2
23B	RB3195721204	OIL SPLASH DISK	2
26	RB1595600172	NUT	2
31	RB3000440100	BEARING	1
32	RB1502100100	BEARING	1
33	RB3000460100	BEARING	2
37	RB2022930100	INTERNAL RING	1
43	RB3008480954	SEAL RING	1
50	RB3159671005	GASKET	2
75	RB2035391006	PLUG	1
75C	RB1518700901	PLUG	1
76	RB1519000901	PLUG	1
77	RB1519700901	PLUG	1
78	RB2035391006	PLUG	1
79	RB2022880901	PLUG	2

RBS 35-46

Kit	301RBS6010		
Postion	**Part Number**	**Description**	**Qty**
23A	RB3050791204	OIL SPLASH DISK	1
23B	RB3050791204	OIL SPLASH DISK	2
23C	RB3050791204	OIL SPLASH DISK	1
25	RB3202501252	SEALING SPACER	4
26	RB3005420125	LOCK NUT	2
31	RB2041610100	BEARING	1
32	RB1503000100	BEARING	1
33	RB2046180100	BEARING	2
37	RB2038620100	INTERNAL RING	1
43	RB1987640954	SEAL RING	1
45	RB1516100308	FLEXIBLE RING	16
50	RB1964741005	GASKET	2
63A	RB1993790145	COMP. RING	6
75	RB2035010901	PLUG	1
76	RB1518700901	PLUG	2
77	RB1519700901	PLUG	3

RBS 55-66

Kit	302RBS6010		
Postion	**Part Number**	**Description**	**Qty**
23A	RB3051201204	OIL SPLASH DISK	1
23B	RB3051201204	OIL SPLASH DISK	2
23C	RB3051201204	OIL SPLASH DISK	1
25	RB3262480310	SEALING SPACER	4
26	RB1506000125	LOCK NUT	2
31	RB2035190100	BEARING	1
32	RB1502400100	BEARING	1
33	RB1504400100	BEARING	2
37	RB2033490100	INTERNAL RING	1
43	RB1978220954	SEAL RING	1
45	RB1516200308	FLEXIBLE RING	16
50	RB1978031005	GASKET	2
63A	RB1993800145	COMP. RING	6
75	RB2035010901	PLUG	2
76	RB1518700901	PLUG	2
77	RB1519800901	PLUG	2
78	RB2035391006	PLUG	4

RBS 75-86

Kit	303RBS6010		
Postion	**Part Number**	**Description**	**Qty**
23A	RB3052241204	OIL SPLASH DISK	1
23B	RB3052241204	OIL SPLASH DISK	2
23C	RB3052241204	OIL SPLASH DISK	1
25	RB3182670310	SEALING SPACER	4
26	RB1937640125	LOCK NUT	2
31	RB2077930100	BEARING	1
32	RB2032920100	BEARING	1
33	RB2032930100	BEARING	2
37	RB2033500100	INTERNAL RING	1
43	RB2033510954	SEAL RING	2
45	RB1516300308	FLEXIBLE RING	16
50	RB1937601005	GASKET	2
63A	RB2018270145	COMP. RING	6
76	RB2011510901	PLUG	2
77	RB2054010901	PLUG	2
77	RB1519700901	PLUG	2
78	RB1519301006	PLUG	4
79	RB2011300901	PLUG	2

RBS 95-106

Kit	304RBS6010		
Postion	**Part Number**	**Description**	**Qty**
23A	RB3205911204	OIL SPLASH DISK	1
23B	RB3205911204	OIL SPLASH DISK	2
23C	RB3205911204	OIL SPLASH DISK	1
25	RB3253100301	SEALING SPACER	4
26	RB1506300125	LOCK NUT	2
31	RB2077950100	BEARING	1
32	RB1503200100	BEARING	1
33	RB1505000100	BEARING	2
37	RB3256110100	INTERNAL RING	1
43	RB1891180954	SEAL RING	2
45	RB3253090308	FLEXIBLE RING	16
50	RB2200241005	GASKET	2
63A	RB2309610145	COMP. RING	6
76	RB2011510901	PLUG	2
77	RB1519800901	PLUG	2
78	RB1519301006	PLUG	4
79	RB2011300901	PLUG	2

RBS 115-126

Kit	305RBS6010		
Postion	**Part Number**	**Description**	**Qty**
23A	RB3092861204	OIL SPLASH DISK	1
23B	RB3092861204	OIL SPLASH DISK	2
23C	RB3092861204	OIL SPLASH DISK	1
25	RB3250850301	SEALING SPACER	2
26	RB1507400125	LOCK NUT	2
27A	RB1982930125	LOCK NUT	1
31	RB1830760100	BEARING	1
32	RB1918970100	BEARING	1
33	RB1504600100	BEARING	2
37	RB3256270100	INTERNAL RING	1
43	RB1628200954	SEAL RING	1
45	RB3250840308	FLEXIBLE RING	16
50	RB2300261005	GASKET	2
63A	RB2018570145	COMP. RING	8
76	RB1518900901	PLUG	2
77	RB1519800901	PLUG	4
78	RB1519401006	PLUG	4
79	RB2026730901	PLUG	2

RBS 135-155

Kit	306RBS6010		
Postion	**Part Number**	**Description**	**Qty**
23A	RB3198661204	OIL SPLASH DISK	1
23B	RB3198661204	OIL SPLASH DISK	2
23C	RB3198661204	OIL SPLASH DISK	1
25	RB3203150301	SEALING SPACER	2
26	RB1507000125	LOCK NUT	2
27A	RB2034020125	LOCK NUT	1
31	RB1504000100	BEARING	1
32	RB3005370100	BEARING	1
33	RB1504700100	BEARING	2
37	RB3256280100	INTERNAL RING	1
43	RB1498300954	SEAL RING	1
45	RB1516600308	FLEXIBLE RING	16
50	RB2300951005	GASKET	2
76	RB1518900901	PLUG	2
77	RB1519800901	PLUG	4
78	RB1519401006	PLUG	4
79	RB2026730901	PLUG	2

RBS 165-175

Kit	307RBS6010		
Postion	**Part Number**	**Description**	**Qty**
23A	RB2200690955	OIL SPLASH DISK	1
23B	RB2200690955	OIL SPLASH DISK	2
23C	RB2200680955	OIL SPLASH DISK	1
25	RB3245160301	SEALING SPACER	2
26	RB3005950125	LOCK NUT	2
27A	RB1507300100	LOCK NUT	1
31	RB3003290100	BEARING	1
32	RB1504000100	BEARING	1
33	RB1504000100	BEARING	2
37	RB2002600108	INTERNAL RING	1
43	RB2039200954	SEAL RING	1
45	RB3245300308	FLEXIBLE RING	16
50	RB2300871005	GASKET	2
63	RB2021310145	COMP. RING	4
76	RB1518900901	PLUG	2
77	RB1519900901	PLUG	2
78	RB1836851006	PLUG	4

RBS 205-225

Kit	308RBS6010		
Postion	**Part Number**	**Description**	**Qty**
23A	RB2200870955	OIL SPLASH DISK	1
23B	RB2200860955	OIL SPLASH DISK	2
23C	RB2200870955	OIL SPLASH DISK	1
25	RB3245170301	SEALING SPACER	2
26	RB2022590125	LOCK NUT	2
27A	RB1981830100	LOCK NUT	1
31	RB3005360100	BEARING	1
32	RB3008090100	BEARING	1
33	RB1502000100	BEARING	2
37	RB2005980108	INTERNAL RING	1
43	RB1981810954	SEAL RING	1
45	RB3245310308	FLEXIBLE PISTON RI	16
50	RB2300861005	GASKET	2
63	RB2054950145	COMP. RING	4
76	RB1518900901	PLUG	2
77	RB1519900901	PLUG	2
78	RB1836851006	PLUG	4

WARRANTY
GARDNER DENVER BLOWERS
RBS SERIES

GENERAL PROVISIONS AND LIMITATIONS

Gardner Denver (the "Company") warrants to each original retail purchaser ("Purchaser") of its products from the Company or its authorized distributor that such products are, at the time of delivery to the Purchaser, made with good material and workmanship. No warranty is made with respect to:

1. Any product which has been repaired or altered in such a way, in the Company's judgment, as to affect the product adversely.
2. Any product which has, in the Company's judgment, been subject to negligence, accident, improper storage, or improper installation or application.
3. Any product which has not been operated or maintained in accordance with the recommendations of the Company.
4. Components or accessories manufactured, warranted and serviced by others. Claims for items described in (4) above should be submitted directly to the manufacturer.

WARRANTY PERIOD

The Company's obligation under this warranty is limited to repairing or, at its option, replacing, during normal business hours at an authorized service facility of the Company, any part which in its judgment proved not to be as warranted within the applicable Warranty Period as follows.

BARE BLOWERS

Basic bare blowers, consisting of all parts within, are warranted for 12 months from date of initial use or 18 months from date of shipment to the first purchaser, whichever occurs first. Any disassembly or partial disassembly of the blower, or failure to return the "unopened" blower per Company instructions, will be cause for denial of warranty.

OTHER COMPONENTS

All other components are warranted for 12months from date of initial use or 18 months from date of shipment to first purchaser, whichever comes first. The Company reserves the right to withdraw the Warranty where evidence indicates application outside the stated performance area, or where there is evidence of abuse

LABOR TRANSPORTATION AND INSPECTION

The Company will provide labor, by Company representative or authorized service personnel, for repair or replacement of any product or part thereof which in the Company's judgment is proved not to be as warranted. Labor shall be limited to the amount specified in the Company's labor rate schedule.

Labor costs in excess of the Company rate schedules caused by, but not limited to, location or inaccessibility of equipment, or labor provided by unauthorized service personnel is not provided by this warranty.

All costs of transportation of product, labor or parts claimed not to be as warranted and, of repaired or replacement parts to or from such service facilities shall be borne by the Purchaser. The Company may require the return of any part claimed not to be as warranted to one of its facilities as designated by the Company, transportation prepaid by Purchaser, to establish a claim under this warranty. Replacement parts provided under the terms of the warranty are warranted for the remainder of the Warranty Period of the product upon which installed to the same extent as if such parts were original components.

DISCLAIMER

THE FOREGOING WARRANTY IS EXCLUSIVE AND IT IS EXPRESSLY AGREED THAT, EXCEPT AS TO TITLE, THE COMPANY MAKES NO OTHER WARRANTIES, EXPRESSED, IMPLIED OR STATUTORY, INCLUDING ANY IMPLIED WARRANTY OF MERCHANTABILITY.

THE REMEDY PROVIDED UNDER THIS WARRANTY SHALL BE THE SOLE, EXCLUSIVE AND ONLY REMEDY AVAILABLE TO THE PURCHASER AND IN NO CASE SHALL THE COMPANY BE SUBJECT TO ANY OTHER OBLIGATIONS OR LIABILITIES. UNDER NO CIRCUMSTANCES SHALL THE COMPANY BE LIABLE FOR ANY SPECIAL, INDIRECT, INCIDENTAL OR CONSEQUENTIAL DAMAGES, EXPENSES, LOSSES OR DELAYS HOWSOEVER CAUSED.

No statement, representation, agreement, or understanding, oral or written, made by any agent, distributor, representative, or employee of the Company which is not contained in this Warranty will be binding upon the Company unless made in writing and executed by an officer of the Company.

This warranty shall not be effective as to any claim which is not presented within 30 days after the date upon which the product is claimed not to have been as warranted. Any action for breach of this warranty must be commenced within one year after the date upon which the cause of action occurred.

Any adjustment made pursuant to this warranty shall not be construed as an admission by the Company that any product was not as warranted.

For additional information, contact your local representative or visit:
www.contactgd.com/mobile

Please recycle after use.

QuickPik

RBS - 25

Product Information

CORRECTED VALUES	ORIGINAL UNITS	ENGLISH UNITS	METRIC UNITS
Ambient Pressure	14.696 PSIA	14.696 PSIA	1.013 bar a
Elevation	0 ALTI-FT	0 ALTI-FT	0 alti-m
Inlet Pressure	14.696 PSIA	0 PSIG	0 bar g
Inlet Pressure Loss	0.25 PSIG	0.250 PSIG	0.017 bar g
Inlet Temp	75 F	75 °F	24 °C
Inlet Flow	150 SCFM	155 ICFM	263 m³/h
Discharge Pressure	9.5 PSIG	9.500 PSIG	0.655 bar g
Discharge Pressure Loss	0.15 PSIG	0.150 PSIG	0.01 bar g
MEASURED VALUES	**ORIGINAL UNITS**	**ENGLISH UNITS**	**METRIC UNITS**
Speed	4309 RPM	4309 RPM	4309 RPM
RPM % Of Max	86	86	86
Power	10.3 HP	10.3 HP	7.681 kW
Discharge Temp	214 °F	214 °F	101 °C
Temp % of Max	80	80	80
Noise	89 dBa	89 dBa	89 dBa
Pressure % of Max	99	99	99
Adiabatic Efficiency	53.11%	53.11%	53.11%

PHYSICAL	
Weight	90 lbs.
Gear Diameter / Center Distance	2.68 in.
Connection Size	2.5 in.
Case Length	in.
WR^2	lb-ft^2
Orientation	horizontal
PERFORMANCE	
Max Delta P	9.99309753 PSI
Max Temp	266 °F
Max Speed	5000 RPM
Min Speed	1200 RPM
Max Delta T	162 °F

Created: 03-10-2022

QuickPik

AMBIENT GAS PARAMETERS	ENGLISH UNITS	METRIC UNITS
Molecular Weight	28.842 lbm/lbmol	28.842 kg/kgmol
R Value	53.567 ft.lbf/lbm.R	0.288 kJ/kg.K
Density	0.074 lbm/ft ^{3}	1.183 kg/m^3

GAS MIX:	VOL
Air	100%

Performance Curves

Temperature Rise

DEFINED CONDITIONS
139 F

RPM
4309

Published Data
Defined Conditions

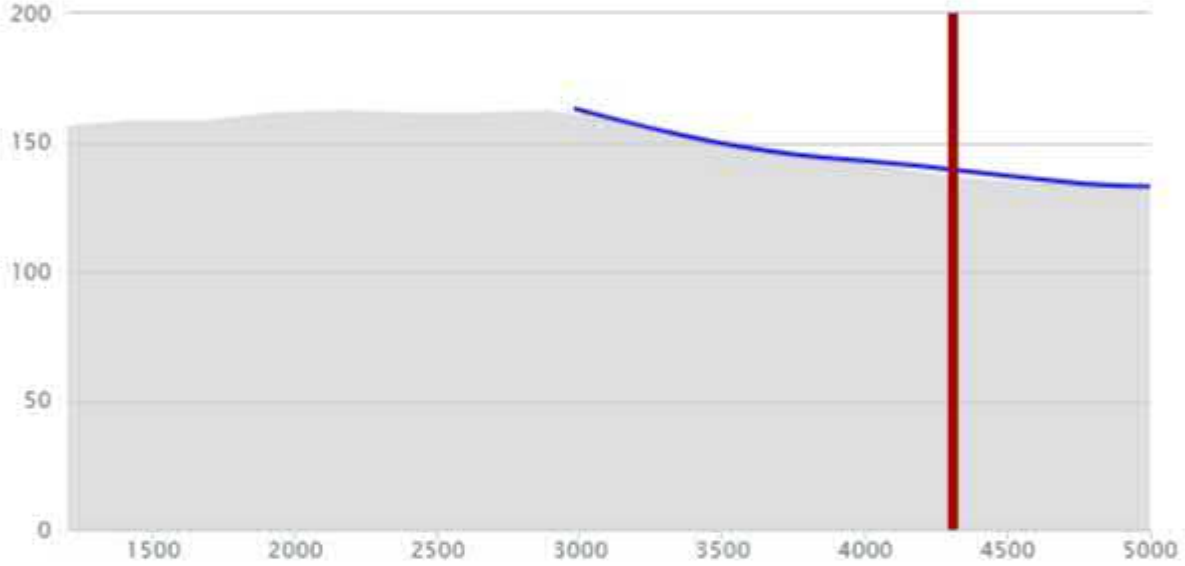

Flow

DEFINED CONDITIONS
149 SCFM

RPM
4309

Published Data
Defined Conditions

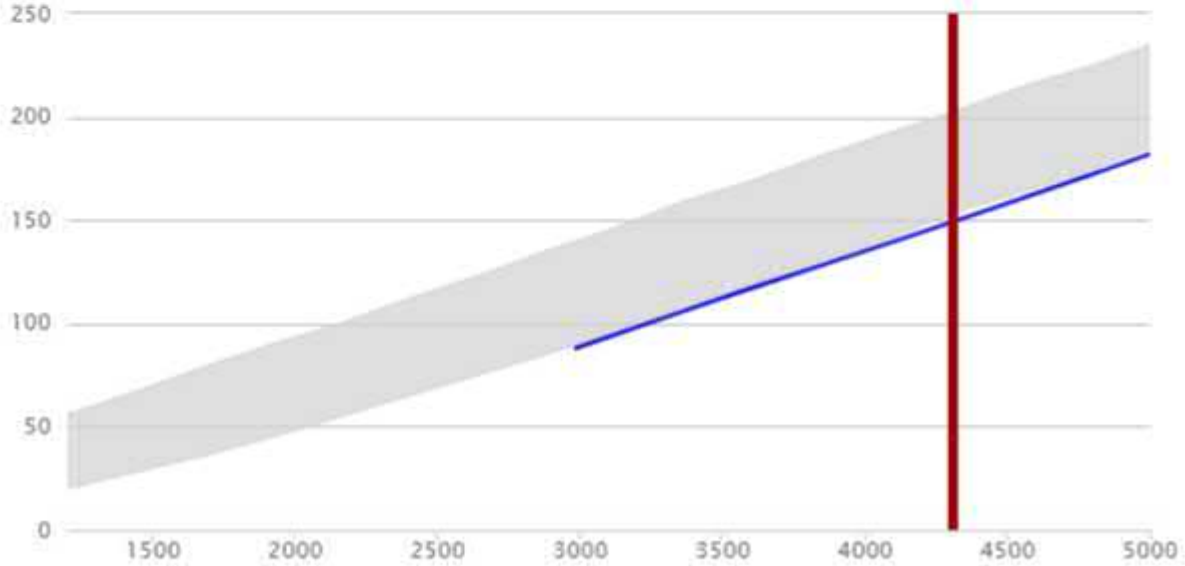

Created: 03-10-2022

QuickPik

Performance Curves

Power

DEFINED CONDITIONS
10.3 HP

RPM
4309

Published Data
Defined Conditions

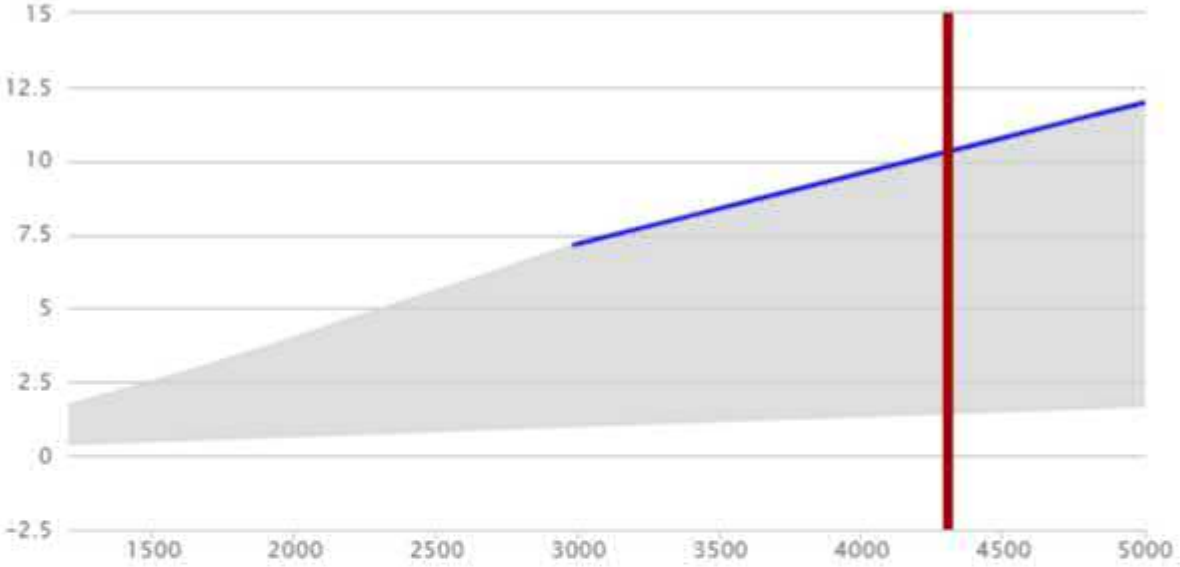

Torque

DEFINED CONDITIONS
12.6 ft-lb

RPM
4309

Published Data
Defined Conditions

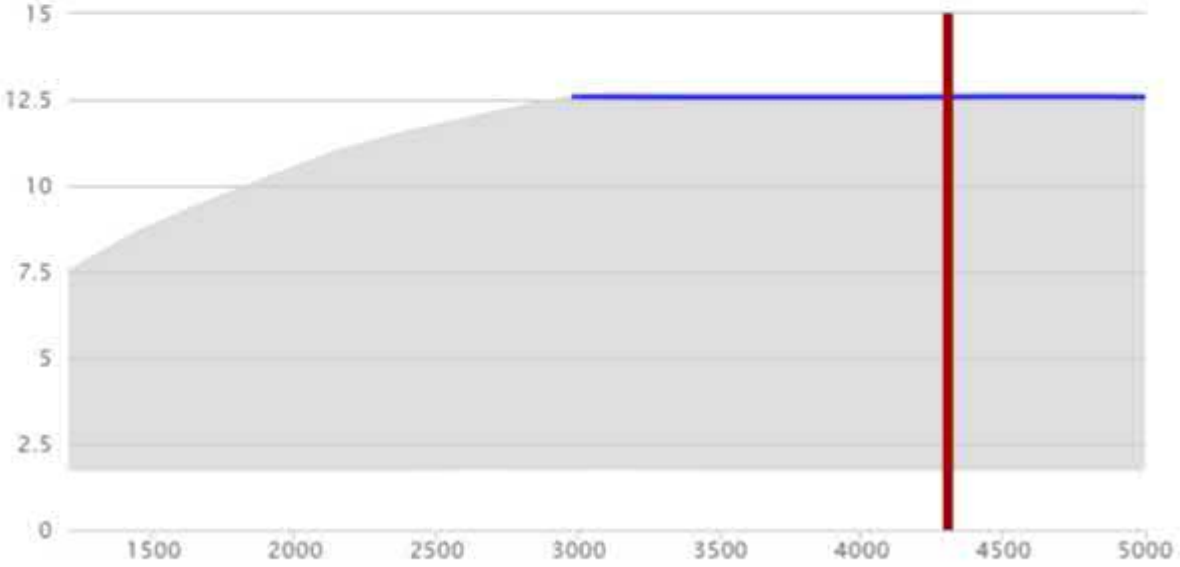

Created: 03-10-2022

Attachment D: Existing 8-Ft Diameter Filter Cut Sheet

EXISTING 8-FT DIAMETER FILTER CUT SHEET

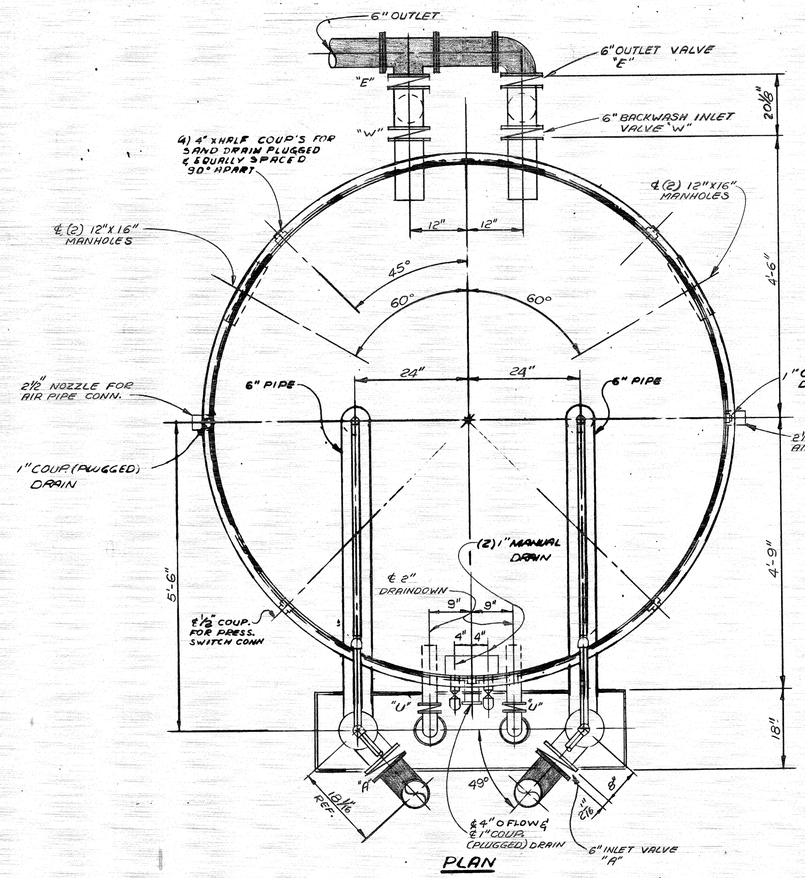

PLAN

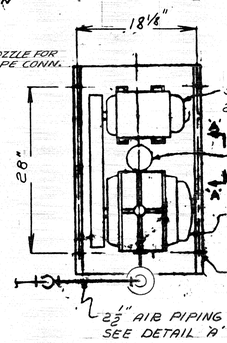

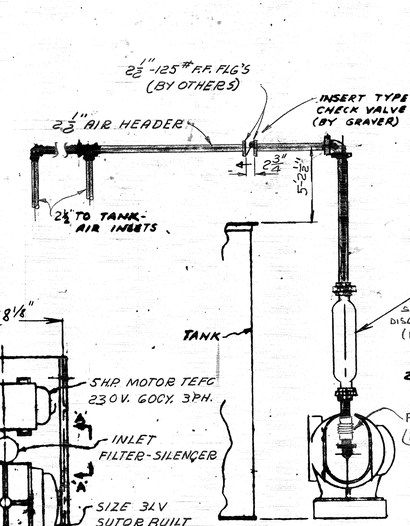

DETAIL "A"

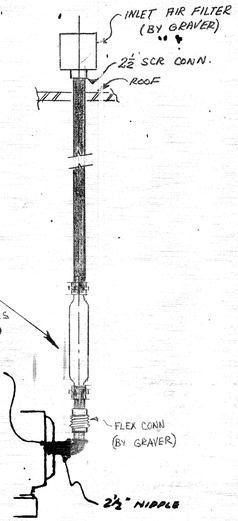

VIEW "A-A"

DESIGN DATA:

FLOODED WEIGHT	64,000 #
DESIGN FLOW	113 GPM
WT. OF FLOW SPLIT BOX	690 # (OPERATING)

REFERENCE DWGS.

FLOW SPLIT BOX	N-16757
STRAINER ASSEMBLY	N-10261
PRESSURE SWITCH ASSY.	A-15145
INTERLOCK INSTALLATION	N-11163

NOTE:

1.- ALL PIPE SHOWN SHAPED BY PURCHASER.
2.- PURCHASER IS RESPONSIBLE FOR THE PROPER SUPPORT OF ALL EQUIPMENT.
3.- PURCHASER TO MAKE PROVISIONS FOR FIELD FIT OF PIPING DUE TO NORMAL FABRICATION TOLERANCES OF TANK.
4.- FLANGED CONNECTIONS ARE 125# FLAT FACED BOLT HOLES TO STRADDLE ℄
5.- VENT PIPING FURNISHED BY GRAVER IN RANDOM LENGTHS WITH SCR. FITTINGS.

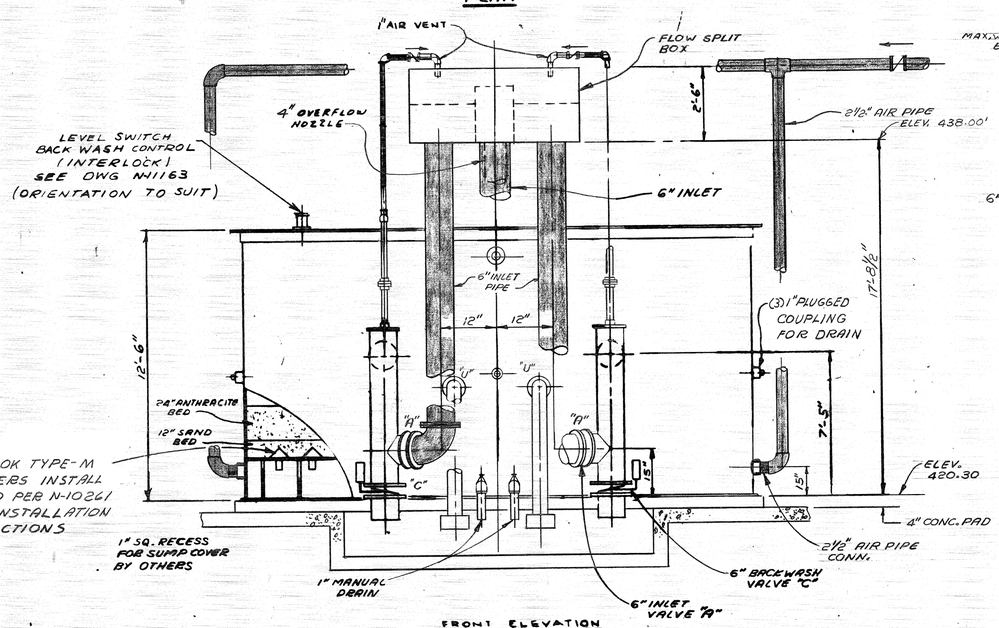

FRONT ELEVATION
ORIENT FROM PLAN

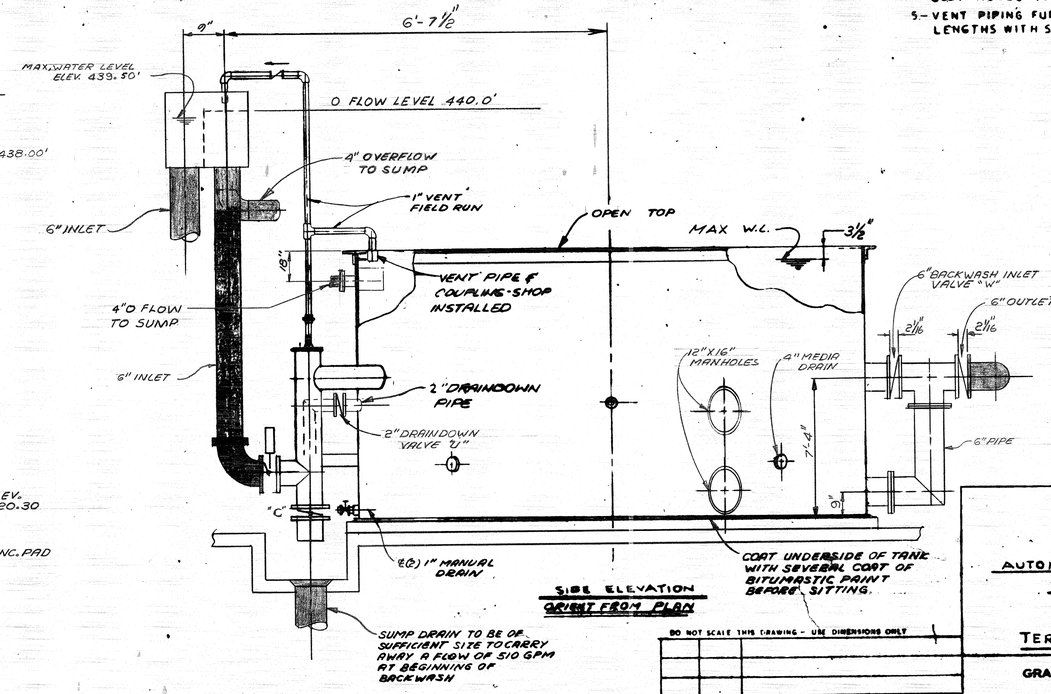

SIDE ELEVATION
ORIENT FROM PLAN

DO NOT SCALE THIS DRAWING - USE DIMENSIONS ONLY

NO	DATE	REVISION	
A	8/8/72	REVISED AT CUSTOMER'S REQUEST	DAT

THIS DRAWING CERTIFIED CORRECT AS BUILT

GRAVER

ASSEMBLY
AUTOMATIC MONOSCOUR FILTER
TWO COMPARTMENT
8' X 0" X 12'-6" HG.
TERTIARY APPLICATION

GRAVER WATER CONDITIONING CO.

SCALE ~ | DWN RV | DATE 8-2-72 | CKD

T-18582 A

T-6654-7891-14424-15496-18213-18582

Attachment E: Existing Filter Control Panel and Relocation Space


Existing Filter Control Panel.
A
USABlueBook
Owner will remove shelf and metal cabinets to make room for existing Filter Control Panel to be temporarily relocated down to the floor, in an effort to make space for the new Filter Control Panel.

Attachment F: Division of Fire Safety Permit Application Form

VERMONT DEPARTMENT OF PUBLIC SAFETY

DIVISION OF FIRE SAFETY

Office of the State Fire Marshal, State Fire Academy and State HAZMAT Team

www.firesafety.vermont.gov

VERMONT

Construction Permit Application for Renovation and Modification Projects under $200,000 in Existing Buildings

This application is not for other construction project types: New Construction, Additions, Change of Use

All sections are required to be filled out completely and must be typed or printed legibly

Have you consulted with a Fire Marshal regarding this project? Name: _____

** The project must meet one of the below definitions and be under $200,000 **

☐ **Modification** - The reconfiguration of any space; the addition, relocation, or elimination of any door or window; the addition or elimination of load-bearing elements; the reconfiguration or extension of any system; or the installation of any additional equipment.

☐ **Renovation** - The replacement in kind, strengthening, or upgrading of building elements, materials, equipment, or fixtures, that does not result in a reconfiguration of the building spaces within.

Section A - Owner Site Location and Owner Information

Building Name _____

Building Address _____
911 Number / Street City State Zip

Building Owner Name _____

Owner Address _____
Mailing Address City State Zip

Owner Phone # _____ **Owner E-mail** _____

Section B - Applicant Information

Company _____ **Contact Person** _____

Address _____
Mailing Address City State Zip

Phone _____ **E-mail** _____

Contractor and/or Architect

Name _____
Company Primary Contact

Address _____
Mailing Address City State Zip

Phone _____ **E-mail** _____

This section for office use only

Structure ID	Work Item ID		Received Date	Reviewer
Check From	Check #	Check Amount	Event ID	Date Permitted

Section C - Description / Scope of work

Please provide a description of the work being performed. Attach additional pages as necessary to sufficiently describe the work. Dimensional drawings, plans and/or a fire safety analysis may be required by the area Fire Marshal as a requirement to this permit.

Section D - Building Use and Protection Information

This section is intended to establish general information pertaining to the current and/or proposed use.

Describe below how the building is currently used?

Additional Building Information

Occupancy Classification(s) _____

Comments:

Fire and Life Safety Systems - New or modified as part of this project

Single Station Alarms	☐ Install/Add Smoke Alarms	☐ Install/Add Carbon Monoxide Alarms	
Fire Alarm System*	☐ New System	☐ Modifying Existing	☐ Existing
Sprinkler System*	☐ New System	☐ Modifying Existing	☐ Existing
Other Systems*	☐ New System	☐ Modifying Existing	☐ Existing

***Separate Permit Application and Fee Required for Fire Alarm, Sprinkler and Other Systems**

Section E - Project Valuation and Fee calculations

The Permit Fee is based on the total valuation of the modification or rehabilitation work for which the permit is being obtained. Electrical, Plumbing and Elevator trades must file a work notice in addition to certifying the valuation of the work as part of this permit.

Calculate fee by multiplying TOTAL PROJECT COST by .008	**Total Project Cost** $	
There is a $50 Minimum Fee	Fee is 8.00 per $1000.	x .008
This line is for fee calculated or $50 whichever is greater **Checks payable to Department of Public Safety**	**Total Fee** $	

General Information

I hereby attest by my signature under 13 V.S.A. 3016 (filing a false claim with a Department or Agency of the State) that I am the owner, or owner's designated representative and that the information contained within this form is correct and accurate to the best of my knowledge:

Signature of Applicant: _____ **Date:** _____

☐ **Waterbury Regional Office** 45 State Dr Waterbury, VT 05671-8200 Phone: (802) 479-4434	☐ **Rutland Regional Office** 56 Howe St, Bldg A, Ste 200 Rutland, VT 05701 Phone: (802) 786-5867	☐ **Springfield Regional Office** 100 Mineral St, Ste 307 Springfield, VT 05156 Phone: (802) 216-0500	☐ **Williston Regional Office** 380 Hurricane Lane, Ste 101 Williston, VT 05495 Phone: (802) 879-2300

Attachment G: Revised Specification 01125 – Owner-Furnished Products

SECTION 01125 – OWNER-FURNISHED PRODUCTS

PART 1 GENERAL

1.01 DESCRIPTION

A. Scope:

1. This Section includes requirements and procedures for Owner-furnished materials and equipment to be installed by CONTRACTOR.

2. CONTRACTOR shall provide labor, materials, tools, equipment, and incidentals shown, specified, and required for accepting, handling, storing as required, installing, checking out and starting-up, and completing OWNER-furnished materials and equipment.

B. Coordination:

1. Review installation procedures for OWNER-furnished materials and equipment and coordinate installation of items to be installed with or before OWNER-furnished materials and equipment.

C. Schedule:

1. Schedule and perform the Work to coordinate with anticipated delivery dates for OWNER-furnished materials and equipment, as indicated in OWNER's procurement contracts or purchase orders therefor.

2. Where OWNER will furnish services of a manufacturer's representative for OWNER-furnished materials and equipment, schedule and perform the Work in accordance with scheduling constraints of manufacturer's representative.

3. Comply with the Contract Times indicated in the Agreement.

1.02 OWNER FURNISHED MATERIALS AND EQUIPMENT

A. Items of equipment and materials to be furnished by OWNER for installation by CONTRACTOR are:

1. Two (2) single compartment Monoscour Gravity Filters and appurtenances.

2. Two (2) Gardner Denver IQ-RB Series Blower Packages and appurtenances.

B. Delivery:

1. Review installation procedures for OWNER-furnished materials and equipment and coordinate installation of

items to be installed with or before OWNER-furnished materials and equipment.

2. OWNER-furnished Gardner Denver IQ-RB Series Blower Packages and appurtenances materials and equipment will be available to CONTRACTOR starting on July/August 2022 and as required thereafter to maintain the Progress Schedule accepted by ENGINEER.

3. OWNER-furnished single compartment Monoscour Gravity Filters and appurtenances materials and equipment will be available to CONTRACTOR starting on August/September 2022 and as required thereafter to maintain the Progress Schedule accepted by ENGINEER.

C. Availability of Procurement Documents:

1. A copy of the procurement contract documents under which materials and equipment were procured by OWNER (as "buyer") are distributed with each copy of, but are not part of, the Bidding Documents.

D. For OWNER-furnished materials and equipment that are not already located at or within proximity to the Site, ENGINEER will keep CONTRACTOR informed of probable delivery date(s) of the materials and equipment included in the procurement contract.

E. OWNER's Responsibilities:

1. Within ten days of the Effective Date of the Contract, arrange for and deliver to CONTRACTOR electronic PDF files of each of seller's shop drawings, samples, and other submittals as reviewed by OWNER or ENGINEER (as applicable), including seller's installation drawings.

2. OWNER shall confirm to CONTRACTOR the delivery date not less than 14 days prior to scheduled delivery.

3. OWNER shall arrange and pay for delivery to Site of OWNER-furnished materials and equipment.

4. Upon delivery, OWNER shall inspect, jointly with CONTRACTOR, the materials and equipment delivered. Where appropriate, OWNER will arrange with seller to have seller's representative present at the delivery point to assist in inspecting the materials and equipment delivered.

5. OWNER will submit to seller claims for transportation damage and shall replace damaged, defective, or deficient items of OWNER-furnished materials and equipment.

6. OWNER shall pay for services of seller's factory-trained representative to furnish consultation and advice during the installation of the OWNER-furnished materials and equipment, to inspect, check, and approve installation before operation, and to furnish technical advice and direction during start-up and field testing of the OWNER-furnished materials and equipment. Extent to which services of seller's representative will be provided during installation will be in accordance with the procurement contract documents unless determined otherwise by OWNER.

7. OWNER shall arrange for manufacturers' warranties, inspections, and services relative to OWNER-furnished materials and equipment.

F. Contractor's Responsibilities:

1. Responsibilities for OWNER-furnished materials and equipment delivered to the Site will begin upon CONTRACTOR's commencing to unload and handle OWNER-furnished materials and equipment at that location.

2. Receive and unload at the Site OWNER-furnished materials and equipment. Provide labor, materials, equipment, tools, and incidentals for unloading. Perform unloading promptly. Pay all charges for damage due to negligence or delay by CONTRACTOR.

3. Inspect for completeness or damage, jointly with OWNER, and reject defective items. OWNER reserves the right to accept OWNER-furnished items rejected by CONTRACTOR and to authorize their use in the Work.

4. Indicate to OWNER signed acceptance of delivery on copy of shipping invoice.

5. Where property insurance for the Contract is furnished by CONTRACTOR, increase the amount of property insurance to be not less than that indicated in the Contract Documents plus the replacement value of OWNER-furnished materials and equipment as indicated in the property insurance requirements in the Supplementary Conditions. Furnish to OWNER copies of evidence of such revised property insurance coverage amounts.

6. Handle, store, and maintain OWNER-furnished materials and equipment. Pay all charges for damage due to negligence or delay by CONTRACTOR.

7. Repair or replace OWNER-furnished materials and equipment that are missing, lost, or damaged after receipt

by CONTRACTOR. Replacements shall be in accordance with OWNER's procurement contract documents.

8. Coordinate with seller's shop drawings, samples, and other submittals, including seller's installation drawings, reviewed and approved by OWNER or ENGINEER, as applicable.

9. Install, connect, and start up OWNER-furnished materials and equipment in accordance with manufacturer's instructions, unless otherwise specified. Pay all charges for damage due to negligence or delay by CONTRACTOR.

1.03 HANDLING AND STORAGE

A. Handling:

1. Handle OWNER-furnished materials and equipment in accordance with the Contract Documents and the manufacturer's instructions.

B. Storage:

1. Store OWNER-furnished materials and equipment in accordance with the Contract Documents and the manufacturer's instructions.

PART 2 PRODUCTS - NOT USED

PART 3 EXECUTION - NOT USED

END OF SECTION

Attachment H: Revised Specification 01150 – Measurement and Payment

SECTION 01150 - MEASUREMENT AND PAYMENT

PART 1 GENERAL

1.01 DESCRIPTION

A. This Section covers the requirements for measurements and records for payment purposes, and describes the items under which payments will be made for all work performed under this Contract.

B. Items not specified to be measured or paid for shall be included in an appropriate unit price item or in a Lump-sum item.

1.02 MEASUREMENT REQUIREMENTS

A. Where payments will be made for removing rock and existing materials, notify Engineer so that he may inspect the materials to be removed, so that he may witness the measuring, and so that he may approve the record of measurements. All materials removed without conforming to the above procedures, and which Engineer cannot verify or substantiate, will not be paid for.

B. Maintain complete, neat, clean, and legible field notes for all measured items. Notes shall contain spaces for Contractor's and Engineer's signatures plus additional space for comments. An original and a copy shall be made for all notes and one copy shall be turned over to Engineer daily. The Engineer's signature shall not be construed as an acceptance of the Work, or the measurements made, but shall mean that he was present when the measurements were made.

1.03 SUBMITTALS

A. See Section 01300.

B. Field notes of all measurements for payment purposes delivered to Engineer daily.

C. Copies of all invoices required for payments out of cash allowance(s).

D. Monthly Applications for Payment, on the forms included under contract forms.

1.04 SCHEDULING

A. Notify Engineer, as far in advance as possible, of the making of measurements so that the Engineer may observe existing conditions, work being performed, and measurements being made.

B. Allow for and afford Engineer ample time, space and equipment to observe measurements and to verify measurements and elevations.

PART 2 PRODUCTS

2.01 GENERAL

A. Provide all labor, materials, facilities, levels, measuring devices and all other equipment and items necessary to properly and accurately perform all measurements for payment purposes.

PART 3 EXECUTION

3.01 GENERAL REQUIREMENTS & STIPULATIONS

A. Perform all measuring required under this Section.

B. No separate payments will be made for work under this Contract except for the pay items stipulated in this PART 3. All costs in connection with the Work shall be included in one or more of the pay items as appropriate.

C. Each pay item shall be full compensation for all costs in connection with the item including but not limited to:
   1. The furnishing of all materials, labor, equipment, tools, and all incidentals.
   2. The installation of all materials, equipment, facilities, accessories and appurtenant items.
   3. The proper share of overhead and profit.
   4. Any excavation, trenching, backfilling, dewatering, shoring or testing required.
   5. The restoration of unpaved surfaces.
   6. Any temporary facilities or controls required including flaggers and/or uniformed traffic officers.
   7. All erosion and dust control measures.
   8. All related and incidental work and items necessary or required to complete the Work and to provide completely connected, operational and approved, code-compliant systems capable of performing as required.
   9. Clearing and grubbing.

D. Each pay item which specifically involves excavation shall be considered to include full compensation for:
   1. Excavation in earth.
   2. Disposal of any surplus.
   3. Handling of water as specified.
   4. Installation and removal of sheeting and bracing.

E. If solid rock excavation is required, additional compensation will be paid under the item Rock Excavation and Disposal, with the exception of items which specifically include payment for rock excavation.

3.02 MEASUREMENT & PAYMENT ITEMS

A. The names of the following items are abbreviated forms of the Bid Items as contained on the Price Schedule in the Bid Form. The names, as shown below or on the Bid Form, shall not be construed to represent a complete description of all of the Work included under such items and are provided only as a means of identification and for ease of conversation.

1. TERTIARY FILTER REPLACEMENT, BLOWER BUILDING, AND RELATED IMPROVEMENTS

No measurement required.

Payment shall be lump sum of all work described in the contract documents and as associated with the replacement of the existing tertiary filter with two new tertiary filters, improvements within the filter room, construction of a new blower building, and all related improvements, with the exclusion of Pay Item 2.

2. APPLICATION FEE FOR DIVISION OF FIRE SAFETY CONTRUCTION PERMIT

The cost of this pay item shall be calculated as follows:

(total lump sum cost of Pay Item 1 / $1,000) x $8.00.

Payment shall be lump sum made at the time the permit application is prepared and submitted by the Contractor.

END OF SECTION

Attachment I: Addendum No. 15-12-2022 Bid Form

ADDENDUM NO. 1 5-12-2022 BID FORM

MOUNTAIN WASTEWATER TREATMENT, INC.

MOUNTAIN WASTEWATER TREATMENT FACILITY TERTIARY FILTER REPLACEMENT

TABLE OF CONTENTS

Page

Article 1 – Bid Recipient 1

Article 2 – Bidder's Acknowledgements 1

Article 3 – Bidder's Representations 1

Article 4 – Bidder's Certification 2

Article 5 – Basis of Bid 3

Article 6 – Time of Completion 4

Article 7 – Attachments to this Bid 4

Article 8 – Defined Terms 4

Article 9 – Bid Submittal 5

ARTICLE 1 – BID RECIPIENT

1.01 This Bid is submitted to:

Mountain Wastewater Treatment, Inc., 1840 Sugarbush Access Road, Warren, VT 05674

1.02 The undersigned Bidder proposes and agrees, if this Bid is accepted, to enter into an Agreement with Owner in the form included in the Bidding Documents to perform all Work as specified or indicated in the Bidding Documents for the prices and within the times indicated in this Bid and in accordance with the other terms and conditions of the Bidding Documents.

ARTICLE 2 – BIDDER'S ACKNOWLEDGEMENTS

2.01 Bidder accepts all of the terms and conditions of the Instructions to Bidders, including without limitation those dealing with the disposition of Bid security. This Bid will remain subject to acceptance for 60 days after the Bid opening, or for such longer period of time that Bidder may agree to in writing upon request of Owner.

ARTICLE 3 – BIDDER'S REPRESENTATIONS

3.01 In submitting this Bid, Bidder represents that:

A. Bidder has examined and carefully studied the Bidding Documents, and any data and reference items identified in the Bidding Documents, and hereby acknowledges receipt of the following Addenda:

Addendum No.	Addendum Date

B. Bidder has visited the Site, conducted a thorough, alert visual examination of the Site and adjacent areas, and become familiar with and satisfied itself as to the general, local, and Site conditions that may affect cost, progress, and performance of the Work.

C. Bidder is familiar with and has satisfied itself as to all Laws and Regulations that may affect cost, progress, and performance of the Work.

D. Bidder has carefully studied all: (1) reports of explorations and tests of subsurface conditions at or adjacent to the Site and all drawings of physical conditions relating to existing surface or subsurface structures at the Site that have been identified in the Supplementary Conditions, especially with respect to Technical Data in such reports and drawings, and (2) reports and drawings relating to Hazardous Environmental Conditions, if any, at or adjacent to the Site that have been identified in the Supplementary Conditions, especially with respect to Technical Data in such reports and drawings.

E. Bidder has considered the information known to Bidder itself; information commonly known to contractors doing business in the locality of the Site; information and observations obtained from visits to the Site; the Bidding Documents; and any Site-related reports and drawings identified in the Bidding Documents, with respect to the effect of

such information, observations, and documents on (1) the cost, progress, and performance of the Work; (2) the means, methods, techniques, sequences, and procedures of construction to be employed by Bidder; and (3) Bidder's safety precautions and programs.

F. Bidder agrees, based on the information and observations referred to in the preceding paragraph, that no further examinations, investigations, explorations, tests, studies, or data are necessary for the determination of this Bid for performance of the Work at the price bid and within the times required, and in accordance with the other terms and conditions of the Bidding Documents.

G. Bidder is aware of the general nature of work to be performed by Owner and others at the Site that relates to the Work as indicated in the Bidding Documents.

H. Bidder has given Engineer written notice of all conflicts, errors, ambiguities, or discrepancies that Bidder has discovered in the Bidding Documents, and confirms that the written resolution thereof by Engineer is acceptable to Bidder.

I. The Bidding Documents are generally sufficient to indicate and convey understanding of all terms and conditions for the performance and furnishing of the Work.

J. The submission of this Bid constitutes an incontrovertible representation by Bidder that Bidder has complied with every requirement of this Article, and that without exception the Bid and all prices in the Bid are premised upon performing and furnishing the Work required by the Bidding Documents.

ARTICLE 4 – BIDDER'S CERTIFICATION

4.01 Bidder certifies that:

A. This Bid is genuine and not made in the interest of or on behalf of any undisclosed individual or entity and is not submitted in conformity with any collusive agreement or rules of any group, association, organization, or corporation;

B. Bidder has not directly or indirectly induced or solicited any other Bidder to submit a false or sham Bid;

C. Bidder has not solicited or induced any individual or entity to refrain from bidding; and

D. Bidder has not engaged in corrupt, fraudulent, collusive, or coercive practices in competing for the Contract. For the purposes of this Paragraph 4.01.D:

1. "corrupt practice" means the offering, giving, receiving, or soliciting of any thing of value likely to influence the action of a public official in the bidding process;

2. "fraudulent practice" means an intentional misrepresentation of facts made (a) to influence the bidding process to the detriment of Owner, (b) to establish bid prices at artificial non-competitive levels, or (c) to deprive Owner of the benefits of free and open competition;

3. "collusive practice" means a scheme or arrangement between two or more Bidders, with or without the knowledge of Owner, a purpose of which is to establish bid prices at artificial, non-competitive levels; and

4. "coercive practice" means harming or threatening to harm, directly or indirectly, persons or their property to influence their participation in the bidding process or affect the e execution of the Contract.

ARTICLE 5 – BASIS OF BID

5.01 Bidder will complete the Work in accordance with the Contract Documents for the following price(s):

==========

Item No.	Brief Description - Unit or Lump Sum Price (in both words and numerals)	Estimated Quantity	Total Price φ (in numerals)
1.	**<u>Tertiary Filter Replacement, Blower Building, and Related Improvements</u>, per lump sum;** _____Dollars and _____ Cents ($_____)	1 L.S.	$_____
2.	**Application Fee for Division of Fire Safety Construction Permit, per lump sum;** _____Dollars and _____ Cents ($_____)	1 L.S.	$_____

==========

Total of All Bid Items	(TOTAL BID)[7]	($_____)~~Φ~~
_____ Dollars		
And _____ Cents		

Notes:

1. Bidder acknowledges that (a) each Bid Unit Price includes an amount considered by Bidder to be adequate to cover Contractor's overhead and profit for each separately identified item, and (b) estimated quantities are not guaranteed, and are solely for the purpose of comparison of Bids, and final payment for all unit price Bid items will be based on actual quantities, determined as provided in the Contract Documents.
2. Unit Prices have been computed in accordance with Paragraph 13.03.B of the General Conditions.
3. In the event that there is a discrepancy between the lump sum or unit prices written in words and figures, the prices written in words shall govern.
4. BIDDERS must bid on each item. All entries in the entire BID must be made clearly and in ink; prices bid must be written in both words and figures.
5. Bidders must insert extended item prices obtained from quantities and unit prices.
6. Bids shall include all applicable taxes and fees.

Φ – For informational comparison only.
* - Indeterminate, Quantity assumed for comparison bids

ARTICLE 6 – TIME OF COMPLETION

6.01 Bidder agrees that the Work will be substantially complete and will be completed and ready for final payment in accordance with Paragraph 15.06 of the General Conditions on or before the dates or within the number of calendar days indicated in the Agreement.

6.02 Bidder accepts the provisions of the Agreement as to liquidated damages.

ARTICLE 7 – ATTACHMENTS TO THIS BID

7.01 The following documents are submitted with and made a condition of this Bid:

A. Required Bid security; **(A Certified Check or Bid Bond for 5% of the Total Amount of Bid)**

B. **List of Proposed Subcontractors**

C. **List of Project References; (4 project references who can attest to Bidders Qualifications to Construct Work of this Nature)**

D. **Evidence of authority to do business in the state of the Project; or a written covenant to obtain such license within the time for acceptance of Bids**

E. **Required "Bidder Qualification Statement with Supporting Data"; and at least 4 projects of similar nature**

NOTE: <u>ALL</u> ITEMS A THROUGH E MUST BE CLEARLY SUBMITTED WITH THIS BID OR BIDDER WILL BE DETERMINED AS NON-RESPONSIVE.

ARTICLE 8 – DEFINED TERMS

8.01 The terms used in this Bid with initial capital letters have the meanings stated in the Instructions to Bidders, the General Conditions, and the Supplementary Conditions.

ARTICLE 9 – BID SUBMITTAL

BIDDER: *[Indicate correct name of bidding entity]*

_____

By:
[Signature] _____

[Printed name] _____
(If Bidder is a corporation, a limited liability company, a partnership, or a joint venture, attach evidence of authority to sign.)

Attest:
[Signature] _____

[Printed name] _____

Title: _____

Submittal Date: _____

Address for giving notices:

_____

_____

_____

Telephone Number: _____

Fax Number: _____

Contact Name and e-mail address: _____

_____

Bidder's License No.: _____
(where applicable)

Attachment J: Revised Plan Sheet E2 – Electrical Single Line Diagram

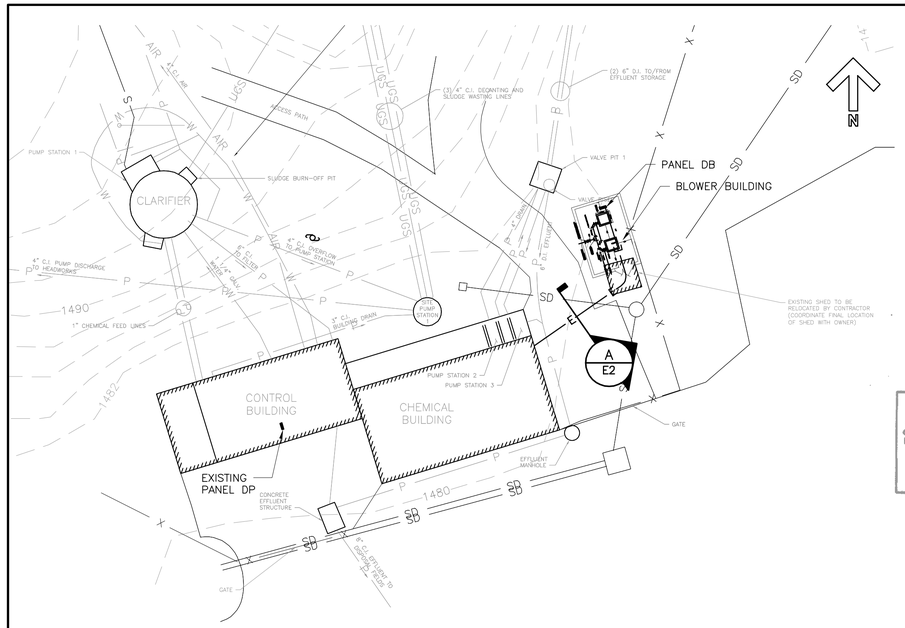

2 ELECTRICAL SITE PLAN

SCALE: 1" = 20'-0"

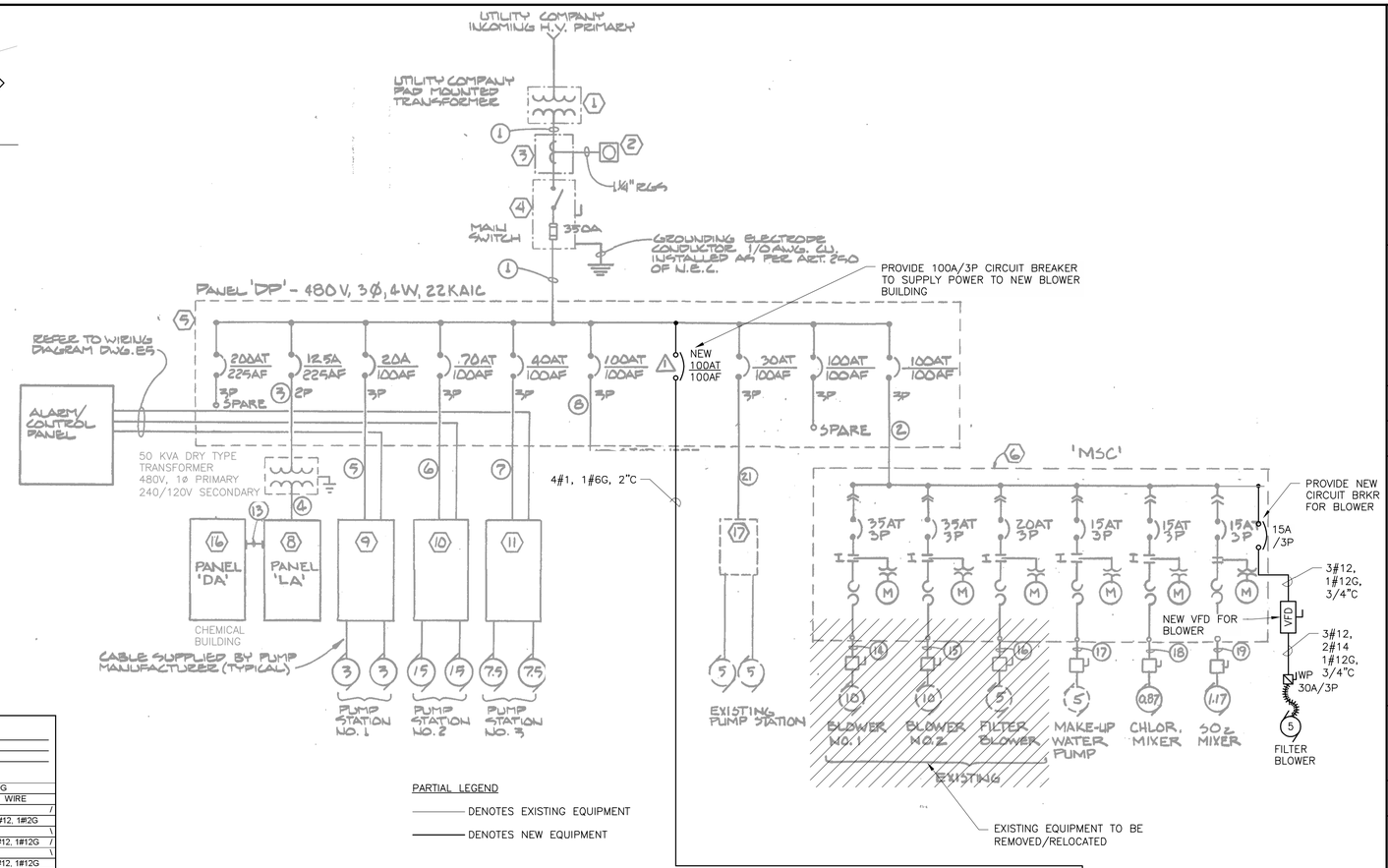

PARTIAL LEGEND

——— DENOTES EXISTING EQUIPMENT

——— DENOTES NEW EQUIPMENT

1 ELECTRICAL SINGLE LINE DIAGRAM

NO SCALE

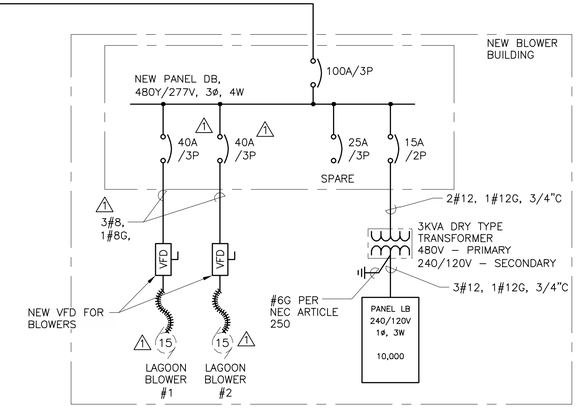

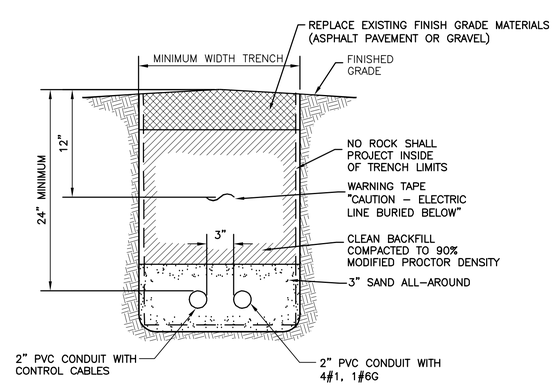

TRENCH SECTION A/E2

NOT TO SCALE

PANEL No. DB

BUS	100 AMPERE	LOCATION	BLOWER BUILDING
PANEL RATING	14 KAIC	MOUNTING	SURFACE
SUPPLY VOLTAGE	480Y/277V, 3Ø	DRAWING No.	E2.1
SERVICE	4 WIRE WITH GROUND BUS		

WIRING WIRE	WIRING COND	DESCRIPTION	VA OR W ØA	VA OR W ØB	VA OR W ØC	BREAKER POLE	BREAKER A	CKT NO	BUS CONN	CKT NO	BREAKER POLE	BREAKER A	VA OR W ØA	VA OR W ØB	VA OR W ØC	DESCRIPTION	WIRING COND	WIRING WIRE
			3733					1	•	2			1667					
3#8, 1#8G	1"	LAGOON BLOWER #1 (15HP)		3733		3	40	3	•	4	3	15		1667		SPARE	3/4"	3#12, 1#12G
					3733			5		6					1667			
			3733					7	•	8	2	15	1500			3KVA TROMFOMER	3/4"	2#12, 1#12G
3#8, 1#8G	1"	LAGOON BLOWER #2 (15HP)		3733		3	40	9	•	10				1500				
					3733			11		12	1	20				LIGHTINHG	3/4"	2#12, 1#12G
								13	•	14								
		SPARE				3	25	15	•	16	3	20				SPARE		
								17		18								
		SPACE						19	•	20						SPACE		
		SPACE						21	•	22						SPACE		
		SPACE						23		24						SPACE		
		SPACE						25	•	26						SPACE		
		SPACE						27	•	28						SPACE		
		SPACE						29		30						SPACE		
		TOTAL 1	7466	7466	7466					TOTAL 2			3167	3167	1667			
		TOTAL 2	3167	3167	1667													
		TOTAL 1 + 2	10633	10633	9133													
		CONN. LOAD TOTAL	30399															
		AMPERES	37															

MAIN BREAKER	100A/3P	MAIN LUGS	
FEEDER ENTRANCE	BOTTOM	ENCLOSURE TYPE	NEMA 1
FEEDER SIZE	4#1, 1#6G, 2"C	ACCESSORIES	
SOURCE	PANEL DP	WITH HINGED COVER AND DOOR IN DOOR CONSTRUCTION	
PANEL TYPE	BOLT-ON		

PANEL No. LB

BUS	100 AMPERE	LOCATION	BLOWER BUILDING
PANEL RATING	10 HAIC	MOUNTING	SURFACE
SUPPLY VOLTAGE	120/240V, 1Ø	DRAWING No.	E3
SERVICE	3 WIRE WITH GROUND BUS		

WIRING WIRE	WIRING COND	DESCRIPTION	VA OR W ØA	VA OR W ØB	BREAKER POLE	BREAKER A	CKT NO	BUS CONN	CKT NO	BREAKER POLE	BREAKER A	VA OR W ØA	VA OR W ØB	DESCRIPTION	WIRING COND	WIRING WIRE
2#12, 1#12G	3/4"	RECEPTACLES	730		1	20	1	•	2	1	20			SPARE		
2#12, 1#12G	3/4"	LIGHTING		182	1	20	3		4	1	20		670	EXHAUST FAN EF-2	3/4"	2#12, 1#12G
		SPARE			1	20	5	•	6	1	20			SPARE		
		SPARE			1	20	7		8	1	20			SPARE		
		SPACE					9	•	10					SPACE		
		SPACE					11		12					SPACE		
		TOTAL 1	730	182					TOTAL 2				670			
		TOTAL 2		670												
		TOTAL 1 + 2	730	852												
		CONN. LOAD TOTAL	1582													
		AMPERES	7													

MAIN BREAKER	20A/2P	MAIN LUGS	
FEEDER ENTRANCE	TOP	ENCLOSURE TYPE	NEMA 1
FEEDER SIZE	3#12, 1#12G, 3/4"	ACCESSORIES	
SOURCE	3 KVA XFMR	WITH HINGED COVER AND DOOR IN DOOR CONSTRUCTION	
PANEL TYPE	BOLT-ON		

LIGHTING FIXTURE SCHEDULE

MARK	MANUFACTURER	CATALOG NUMBER	TYPE	COLOR	MOUNTING	VOLTAGE	LAMPS	REMARKS	TOTAL WATTS
A	LITHONIA LIGHTING	FEM L48 10000LM LPAFL MD MVOLT GZ10 40K 80CRI WLF STSL	LED INDUSTRIAL	WHITE	6" PENDANT	120/277V	10000 LUMEMNS - 4000K		80
B	LITHONIA LIGHTING	ZL10 L48 SMR 5000LM FST MVOLT 40K 80CRI WH	LED STRIP	WHITE	CEILING	120/277V	5000 LUMENS - 4000K		41
C	LITHONIA LIGHTING	WDGE1 LED P2 40K 80CRI VF MVOLT PE DDBXD	WALL PACK	BRONZE	WALL ABOVE DOOR	120V	1271 LUMENS - 4000K		15
EB	LITHONIA LIGHTING	ELM2 LED	EMERGENCY	WHITE	WALL @ 8'	120/277V			3
EB1	LITHONIA LIGHTING	WLTU GY MR	EMERGENCY	WHITE	WALL ABOVE DOOR	120/277V		WET LABELED	6

ADDENDUM NO. 1

DuBois & King inc.

ENGINEERING • PLANNING • MANAGEMENT • DEVELOPMENT
28 NORTH MAIN ST.
RANDOLPH, VT 05060
TEL: (802) 728-3376
FAX: (802) 783-7101
www.dubois-king.com

OFFICES IN VERMONT, NEW HAMPSHIRE, NEW YORK & MAINE

PROFESSIONAL SEAL

BIDDING DOCUMENTS NOT FOR CONSTRUCTION

NO.	DATE	DESCRIPTION	BY	CK'D
1	05-02-2022	PUMPS REVISIONS	EBS	WHH

MOUNTAIN WASTEWATER TREATMENT, INC.

1840 SUGARBUSH ACCESS ROAD
WARREN, VERMONT 05674

MOUNTAIN WASTEWATER TREATMENT FACILITY (MWWTF)

TERTIARY FILTER REPLACEMENT

SHEET TITLE

ELECTRICAL SINGLE LINE DIAGRAM

DRAWN BY	DATE
W.H.H.	May 2022
CHECKED BY	D&K PROJECT #
W.H.H.	224383
PROJ. ENG.	D&K ARCHIVE #
W.H.H.	

SHEET NUMBER

E2

Attachment K: Flow Splitter Box Support Exhibit

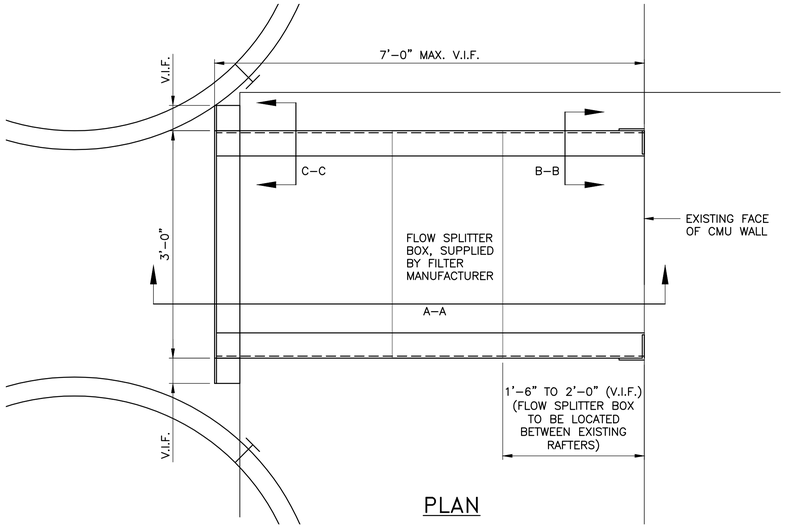

PLAN

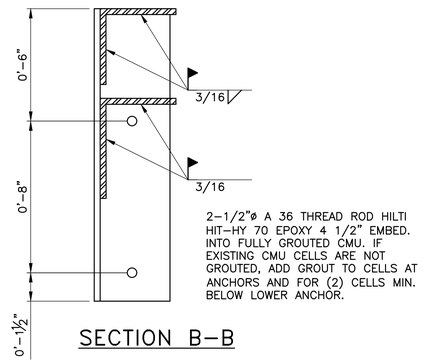

SECTION B-B

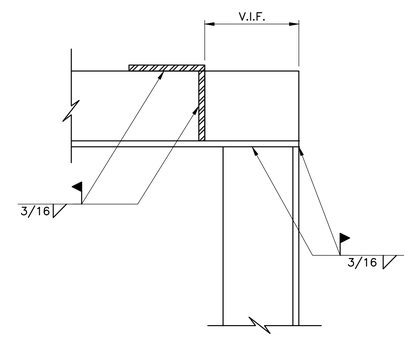

SECTION C-C

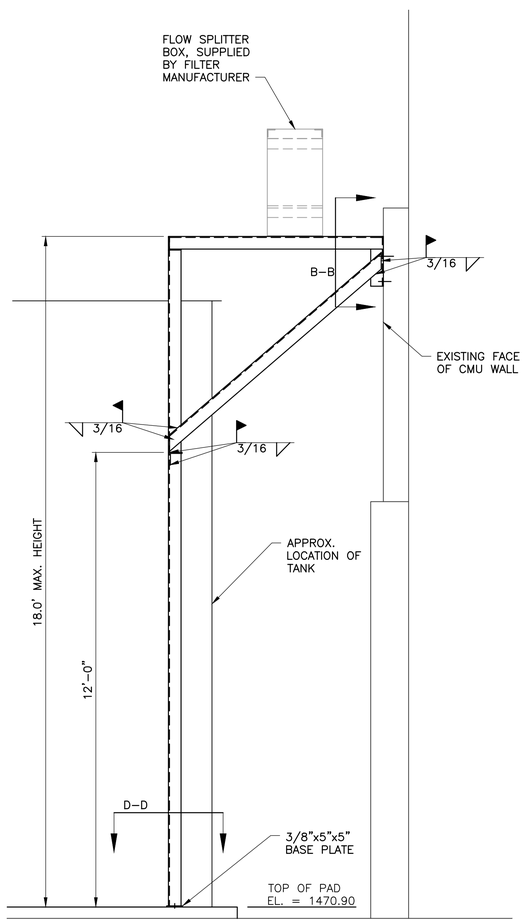

SECTION A-A

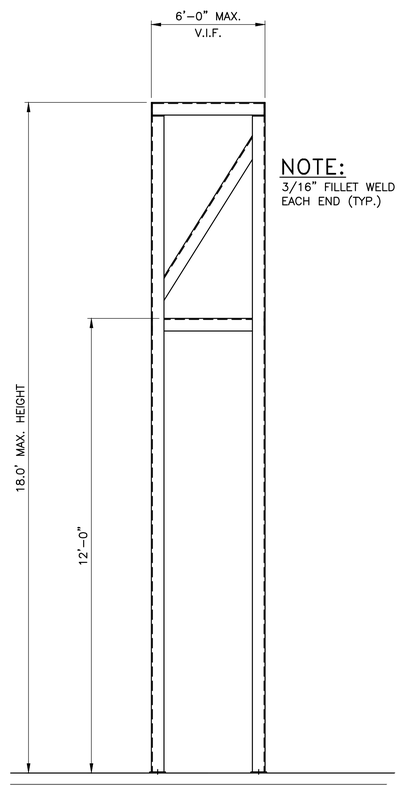

FRONT ELEVATION

NOTE:
3/16" FILLET WELD EACH END (TYP.)

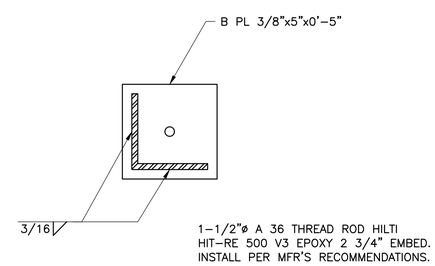

SECTION D-D
TYP. OF (2)

NOTES

1. ALL ANGLES TO BE 4x4x5/16 ASTM A36 STEEL
2. ALL WELDS 70KSI

GENERAL

1. USE STRUCTURAL DRAWINGS IN CONJUNCTION WITH THE SPECIFICATIONS AND ARCHITECTURAL, ELECTRICAL, MECHANICAL AND SITE DRAWINGS.
2. ALL WORK SHALL BE IN ACCORDANCE WITH APPLICABLE CODES, STANDARDS, AND REGULATIONS.
3. DIMENSIONS SHALL NOT BE SCALED FROM DRAWINGS.
4. DETAILS SHOWN ARE TYPICAL. SIMILAR DETAILS APPLY TO SIMILAR CONDITIONS UNLESS OTHERWISE NOTED.
5. CONTRACTOR SHALL VERIFY ALL EXISTING CONDITIONS AND DIMENSIONS AND REPORT DISCREPANCIES TO ENGINEER BEFORE PROCEEDING WITH THE WORK.
6. IN CASE OF DISCREPANCIES BETWEEN THE DRAWINGS AND THE SPECIFICATIONS, THE DRAWINGS GOVERN.

SHOP DRAWINGS AND PRODUCT DATA

1. SHOP DRAWINGS: SUBMIT ELECTRONICALLY TO THE ENGINEER FOR REVIEW. SHOP DRAWINGS WILL BE PROCESSED AND RETURNED ELECTRONICALLY.
2. PRODUCT DATA: SUBMIT ELECTRONICALLY TO THE ENGINEER, MARKING TO INDICATE ACTUAL PRODUCT TO BE PROVIDED. PRODUCT DATA WILL BE PROCESSED AND RETURNED ELECTRONICALLY.

POST-INSTALLED ANCHORS

1. EXCEPT WHERE INDICATED ON THE DRAWINGS, POST-INSTALLED ANCHORS SHALL CONSIST OF THE FOLLOWING ANCHOR TYPES AS PROVIDED BY HILTI, INC.
   - A. ANCHORAGE TO CONCRETE:
     - i. ADHESIVE ANCHORS FOR CRACKED AND UNCRACKED CONCRETE USE:
       - i.a. HILTI HIT-RE 500 V3 SAFE SET SYSTEM WITH HILTI HOLLOW DRILL BIT AND VC 150/300 WITH HILTI HAS THREADED ROD PER ICC ESR-3814
     - ii. BASIS OF DESIGN INCLUDES THE FOLLOWING DESIGN PARAMETERS:
       - ii.a. CRACKED CONCRETE
       - ii.b. WATER-SATURATED CONCRETE
       - ii.c. BASE MATERIAL TEMPERATURE OF 23-104 DEGREES FAHRENHEIT
       - ii.d. ALLOWABLE WITH HAMMER-DRILL, HOLLOW DRILL BIT SYSTEM, AND CORE DRILLING METHODS
   - B. ANCHORAGE TO SOLID GROUTED MASONRY:
     - i. ADHESIVE ANCHORS USE:
       - i.a. HILTI HIT-HY 270 SAFE SET SYSTEM WITH HILTI HOLLOW DRILL BIT AND VC 150/300 PER ICC ESR-4143
       - i.b. STEEL ANCHOR ELEMENT SHALL BE HILTI HAS THREADED ROD OR CONTINUOUSLY DEFORMED STEEL REBAR.
2. ANCHOR CAPACITY USED IN DESIGN SHALL BE BASED ON THE TECHNICAL DATA PUBLISHED BY HILTI OR SUCH OTHER METHOD AS APPROVED BY THE STRUCTURAL ENGINEER OF RECORD. SUBSTITUTION REQUESTS FOR ALTERNATE PRODUCTS MUST BE APPROVED IN WRITING BY THE STRUCTURAL ENGINEER OF RECORD PRIOR TO USE. CONTRACTOR SHALL PROVIDE CALCULATIONS THAT HAVE BEEN SEALED BY ANOTHER LICENSED ENGINEER DEMONSTRATING THAT THE SUBSTITUTED PRODUCT IS CAPABLE OF MEETING THE PERFORMANCE OF THE SPECIFIED PRODUCT. SUBSTITUTIONS WILL BE EVALUATED BY THEIR HAVING AN ICC ESR SHOWING COMPLIANCE WITH THE RELEVANT BUILDING CODE FOR SEISMIC USES, LOAD RESISTANCE, INSTALLATION CATEGORY, AND AVAILABILITY OF COMPREHENSIVE INSTALLATION INSTRUCTIONS. ADHESIVE ANCHOR EVALUATION WILL ALSO CONSIDER CREEP, IN-SERVICE TEMPERATURE, INSTALLATION TEMPERATURE, MOISTURE CONDITION OF CONCRETE, AND DRILLING METHODS.
3. INSTALL ANCHORS PER THE MANUFACTURER PRINTED INSTALLATION INSTRUCTIONS (MPII), AS INCLUDED IN THE ANCHOR PACKAGING.
4. THE CONTRACTOR SHALL ARRANGE AN ANCHOR MANUFACTURER'S REPRESENTATIVE TO PROVIDE ONSITE INSTALLATION TRAINING FOR ALL OF THE ANCHORING PRODUCTS SPECIFIED. THE STRUCTURAL ENGINEER OF RECORD MUST RECEIVE DOCUMENTED CONFIRMATION THAT ALL PERSONNEL WHO INSTALL ANCHORS ARE TRAINED PRIOR TO THE COMMENCEMENT OF ANCHOR INSTALLATION.
5. ANCHOR CAPACITY IS DEPENDENT UPON SPACING BETWEEN ADJACENT ANCHORS AND PROXIMITY OF ANCHORS TO EDGE OF CONCRETE AND/OR MASONRY. INSTALL ANCHORS IN ACCORDANCE WITH SPACING AND EDGE CLEARANCES INDICATED ON THE DRAWINGS.
6. EXISTING REINFORCING BARS IN THE CONCRETE AND/OR MASONRY STRUCTURE MAY CONFLICT WITH SPECIFIC ANCHOR LOCATIONS. UNLESS NOTED ON THE DRAWINGS THAT THE BARS CAN BE CUT, THE CONTRACTOR SHALL REVIEW THE EXISTING STRUCTURAL DRAWINGS AND SHALL UNDERTAKE TO LOCATE THE POSITION OF THE REINFORCING BARS AT THE LOCATIONS OF THE CONCRETE ANCHORS BY HILTI FERROSCAN, GPR, X-RAY OR OTHER MEANS.

STRUCTURAL STEEL

1. CODES AND STANDARDS: AISC "CODE OF STANDARD PRACTICE FOR STEEL BUILDINGS AND BRIDGES;" AISC "SPECIFICATION FOR STRUCTURAL STEEL BUILDINGS" INCLUDING "COMMENTARY;" AWS "STRUCTURAL WELDING CODE;" COMPLY WITH APPLICABLE PROVISIONS EXCEPT AS OTHERWISE INDICATED.
2. SHOP DRAWINGS: SHOW COMPLETE DETAILS AND SCHEDULES (IF REQUIRED) FOR FABRICATION, ASSEMBLY AND ERECTION. FURNISH ANCHOR BOLTS REQUIRED FOR INSTALLATION IN OTHER WORK; FURNISH TEMPLATES FOR BOLT INSTALLATION.
3. PROVIDE CERTIFICATION THAT WELDERS EMPLOYED IN WORK HAVE SATISFACTORILY PASSED AWS QUALIFICATION TESTS WITHIN (2) YEARS FOR TYPE OF WELDING TO BE PERFORMED.
4. STRUCTURAL STEEL SHALL BE AS FOLLOWS:
   ANGLES, BARS AND PLATES: ASTM A36
   ANCHOR RODS: ASTM A36 OR HILTI THREADED ROD
5. SHOP PAINT: TNEMEC 99 SERIES OR APPROVED EQUIVALENT.
6. NON-SHRINK NON-METALLIC GROUT: ASTM C1107, FACTORY-PACKAGED, NONMETALLIC AGGREGATE GROUT, NONCORROSIVE AND NON-STAINING, MIXED WITH WATER TO CONSISTENCY SUITABLE FOR APPLICATION AND A 30-MINUTE WORKING TIME.
7. FABRICATION: COMPLY WITH AISC "SPECIFICATIONS" AND FINAL SHOP DRAWINGS. MARK AND MATCH-MARK UNITS FOR FIELD ASSEMBLY.
8. CONNECTIONS: AS NOTED ON THE DRAWINGS.
9. COMPLY WITH AWS CODE FOR PROCEDURES, APPEARANCE, AND QUALITY OF WELDS.
10. SHOP PAINTING: PAINT STRUCTURAL STEEL WORK, EXCEPT MEMBERS OR PORTIONS OF MEMBERS EMBEDDED IN CONCRETE OR MORTAR AND CONTACT AREAS TO BE WELDED. CLEAN STEEL FREE OF LOOSE MILL SCALE, RUST, OIL AND GREASE. APPLY PRIME PAINT TO PROVIDE A MINIMUM DRY FILM THICKNESS OF 2.0 MILS.
11. ERECTION: COMPLY WITH AISC CODE AND SPECIFICATIONS, AND MAINTAIN WORK IN SAFE AND STABLE CONDITION DURING ERECTION. PROVIDE TEMPORARY BRACING AND SHORING AS REQUIRED; REMOVE WHEN FINAL CONNECTIONS PLACED. COMPLY WITH AWS "STRUCTURAL WELDING CODE" FOR ALL WELDING.
12. SET GROUT PLATES TO PROPER ELEVATIONS USING NON-SHRINK, NON-METALLIC GROUT.
13. TOUCH-UP PRIME PAINT AFTER ERECTION. CLEAN FIELD WELDS AND ABRADED AREAS AND APPLY SAME TYPE PAINT AS USED IN SHOP.

DESIGN CRITERIA

1. CODES: IBC 2015 AND ASCE 7-10, AS AMENDED BY 2015 VERMONT FIRE AND BUILDING SAFETY CODE
2. BUILDING OR STRUCTURE RISK CATEGORY: III
3. SPLITTER BOX LOADS (LIVE): 1000 LBS (FLOODED WEIGHT)
4. SEISMIC LOAD:
   - COMPONENT IMPORTANCE FACTOR (Ip): 1.0
   - MAPPED SPECTRAL RESPONSE COEFFICIENTS: Ss = 0.273 AND S1 = 0.093
   - SITE CLASS: D
   - SPECTRAL RESPONSE COEFFICIENTS: Sds = 0.288 AND Sd1 = 0.148
   - SEISMIC DESIGN CATEGORY: C
   - SEISMIC FORCE-RESISTING SYSTEM: ALL OTHER SELF-SUPPORTING STRUCTURES WITH ap = 1.0 AND Rp = 1.25
   - SEISMIC DESIGN FORCE Fp = 203 LBS
   - ANALYSIS PROCEDURE: EQUIVALENT LATERAL FORCE METHOD

DuBois & King inc.
ENGINEERING • PLANNING • MANAGEMENT • DEVELOPMENT
28 NORTH MAIN ST.
RANDOLPH, VT 05060
TEL: (802) 728-3376
FAX: (802) 783-7101
www.dubois-king.com
OFFICES IN VERMONT, NEW HAMPSHIRE, NEW YORK & MAINE

PROFESSIONAL SEAL

BIDDING DOCUMENTS NOT FOR CONSTRUCTION

NO.	DATE	DESCRIPTION	BY	CK'D

MOUNTAIN WASTEWATER TREATMENT, INC.

1840 SUGARBUSH ACCESS ROAD
WARREN, VERMONT 05674

MOUNTAIN WASTEWATER TREATMENT FACILITY (MWWTF)

TERTIARY FILTER REPLACEMENT

SHEET TITLE

FLOW SPLITTER BOX SUPPORT EXHIBIT

DRAWN BY	DATE
EBS	May 2022
CHECKED BY	D&K PROJECT #
GPH	224383
PROJ. ENG.	D&K ARCHIVE #
GPH	

SHEET NUMBER

EX1

SHEET 1 OF 1